VWV002

Wireless vibration sensor

VIBRATION SENSOR WIRELESS

phase-out article

Discontinuation date: 11/30/2027

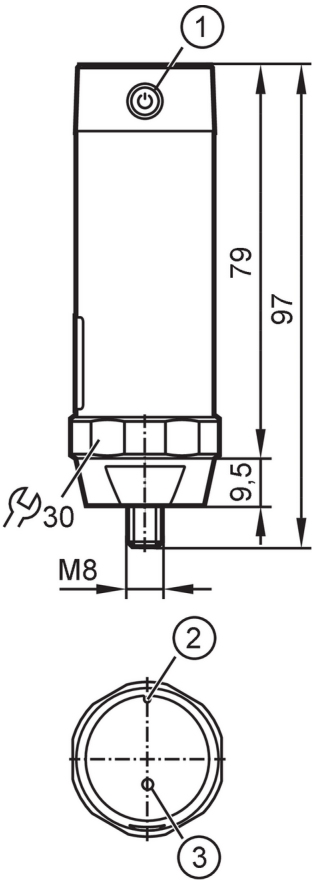

1 mains switch
2 notch for orientation
3 status LED

Product characteristics		
Measuring range of vibration	[g]	-16...16
Measuring range of vibration	[mm/s]	0...25
Frequency range	[Hz]	10...1000
Application		
Application		vibration sensor to ISO 10816
Radio approval for		USA; Canada; EU/RED; Australia; Brazil
Note on radio approval		The list of countries applying the European Radio Equipment Directive 2014/53/EU (RED) can be found under “Downloads”.
Electrical data		
Operating voltage	[V]	3.6 DC; (lithium thionyl chloride battery; battery life: > 4 years battery cannot be replaced)
Protection class		III
Sensor type		microelectromechanical system (MEMS)
Measuring/setting range		
Measuring range of vibration	[g]	-16...16

VWV002

Wireless vibration sensor

VIBRATION SENSOR WIRELESS

Measuring range of vibration [mm/s]		0...25
Frequency range	[Hz]	10...1000
Number of measurement axes		3
Temperature measurement		
Measuring range	[°C]	-30...80
Resolution	[°C]	0.1
Accuracy / deviations		
Accuracy		≤ 10 %
Linearity deviation		≤ 10 %
Software / programming		
Parameter setting options		MQTT
Interfaces		
Frequency band		2,4 GHz ISM
Range		< 25 m
Safety standard		AES-128
Protocol		proprietary
Operating conditions		
Ambient temperature	[°C]	-30...80
Note on ambient temperature		-20...55 °C recommended temperature for maximum battery life
Storage temperature	[°C]	-30...80
Protection		IP 68
Tests / approvals		
EMC		DIN EN 61000-6-2
		DIN EN 301489-1
		DIN EN 301489-17
Mechanical data		
Weight	[g]	169.3
Type of mounting		set screw; (M8)
Materials		housing: stainless steel (316L/1.4404); polyethylene
Tightening torque	[Nm]	8
Accessories		
Items supplied		Mounting adapter
Remarks		
Pack quantity		1 pcs.