# PT2494

## Pressure transmitter

PT-020PSEN14-A-ZVG/US/ /W

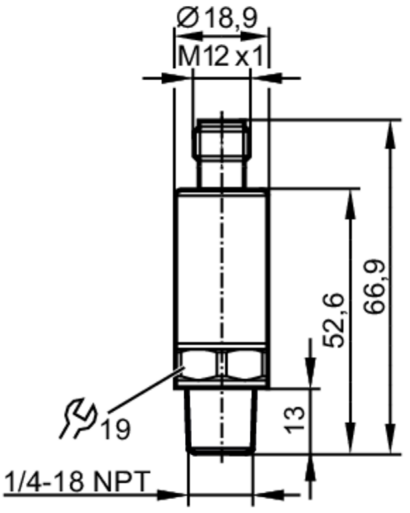


| | | | |
|---|---|---|---|
| **Product characteristics** | | | |
| Number of inputs and outputs | | Number of analog outputs: 1 | |
| Measuring range | | -14.5...200 psi | -100...1380 kPa |
| Process connection | | threaded connection 1/4" NPT external thread | |
| **Application** | | | |
| Application | | for industrial applications | |
| Media | | liquids and gases | |
| Medium temperature | [°C] | -40...90 | |
| Min. burst pressure | | 6525 psi | 45 MPa |
| Pressure rating | | 580 psi | 4 MPa |
| Note on pressure rating | | static | |
| Vacuum resistance | | -14.5 psi | -0.1 MPa |
| Type of pressure | | relative pressure; vacuum | |
| MAWP (for applications according to CRN) | [psi] | 580 | |
| **Electrical data** | | | |
| Operating voltage | [V] | 8.5...36 DC | |
| Min. insulation resistance | [MΩ] | 100; (500 V DC) | |
| Protection class | | III | |
| Reverse polarity protection | | yes | |
| Power-on delay time | [s] | < 0.1 | |
| **Inputs / outputs** | | | |
| Number of inputs and outputs | | Number of analog outputs: 1 | |
| **Outputs** | | | |
| Total number of outputs | | 1 | |
| Output signal | | analog signal | |
| Number of analog outputs | | 1 | |

# PT2494

## Pressure transmitter

PT-020PSEN14-A-ZVG/US/ /W

| | | | |
|---|---|---|---|
| Analog current output | [mA] | 4...20 | |
| Max. load | [Ω] | (Ub – 8,5 V) / 21,5 mA; @8,5V= 0 Ω; @12V max. 160 Ω; @24V max. 720 Ω | |
| Short-circuit proof | | yes | |
| Overload protection | | yes | |
| **Measuring/setting range** | | | |
| Measuring range | | -14.5...200 psi | -100...1380 kPa |
| **Accuracy / deviations** | | | |
| Repeatability | [% of the span] | < ± 0,05; (with temperature fluctuations < 10 K) | |
| Characteristics deviation | [% of the span] | < ± 0,5; (incl. drift when overtightened, zero point and span error, non-linearity, hysteresis) | |
| Linearity deviation | [% of the span] | < ± 0,1 (BFSL) / < ± 0,2 (LS) | |
| Hysteresis deviation | [% of the span] | < ± 0,2 | |
| Long-term stability | [% of the span] | < ± 0,1; (per 6 months) | |
| Temperature coefficient zero point and span | [% of the span / 10 K] | < 0,1 (-25...90 °C) / < 0,2 (-40...-25 °C) | |
| **Reaction times** | | | |
| Step response time analog output | [ms] | 1 | |
| **Operating conditions** | | | |
| Ambient temperature | [°C] | -40...90 | |
| Storage temperature | [°C] | -40...100 | |
| Protection | | IP 67; IP 69K | |
| **Tests / approvals** | | | |
| EMC | | DIN EN 61000-6-2 | |
| | | DIN EN 61000-6-3 | |
| Shock resistance | | DIN EN 60068-2-27 | 50 g (11 ms) |
| Vibration resistance | | DIN EN 60068-2-6 | 20 g (10...2000 Hz) |
| MTTF | [years] | 787 | |
| UL approval | | UL approval number | J027 |
| Pressure equipment directive | | sound engineering practice; can be used for group 2 fluids; group 1 fluids on request | |
| **Mechanical data** | | | |
| Weight | [g] | 58 | |
| Housing | | tubular | |
| Dimensions | [mm] | Ø 18.9 / L = 66.9 | |
| Material | | stainless steel (630/1.4542/17-4 PH); stainless steel (1.4404 / 316L); PEI | |
| Materials (wetted parts) | | stainless steel (630/1.4542/17-4 PH) | |
| Min. pressure cycles | | 60 million; (at 1.2 times nominal pressure) | |
| Tightening torque | [Nm] | < 50; (recommended tightening torque; Depends on lubrication, seal and pressure rating) | |
| Process connection | | threaded connection 1/4" NPT external thread | |
| Restrictor element integrated | | no (can be retrofitted) | |

# PT2494

## Pressure transmitter

PT-020PSEN14-A-ZVG/US/ /W

| Remarks | |
|---|---|
| Remarks | BFSL = Best Fit Straight Line |
| | LS = limit value setting |
| Pack quantity | 1 pcs. |

## Electrical connection

Connector: 1 x M12; coding: A; Contacts: 2




### Connection

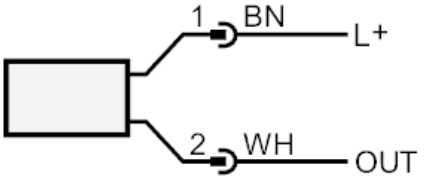


| | |
|---|---|
| OUT | analog output |
| | Colors to DIN EN 60947-5-2 |
| | Core colors : |
| BN = | brown |
| WH = | white |