VSE153

Diagnostic electronics for vibration sensors

DIAGNOSTIC ELECTRONICS

phase-out article

Discontinuation date: 03/31/2026

Alternative articles: VSE163

When selecting an alternative article and accessories please note that technical data may differ!

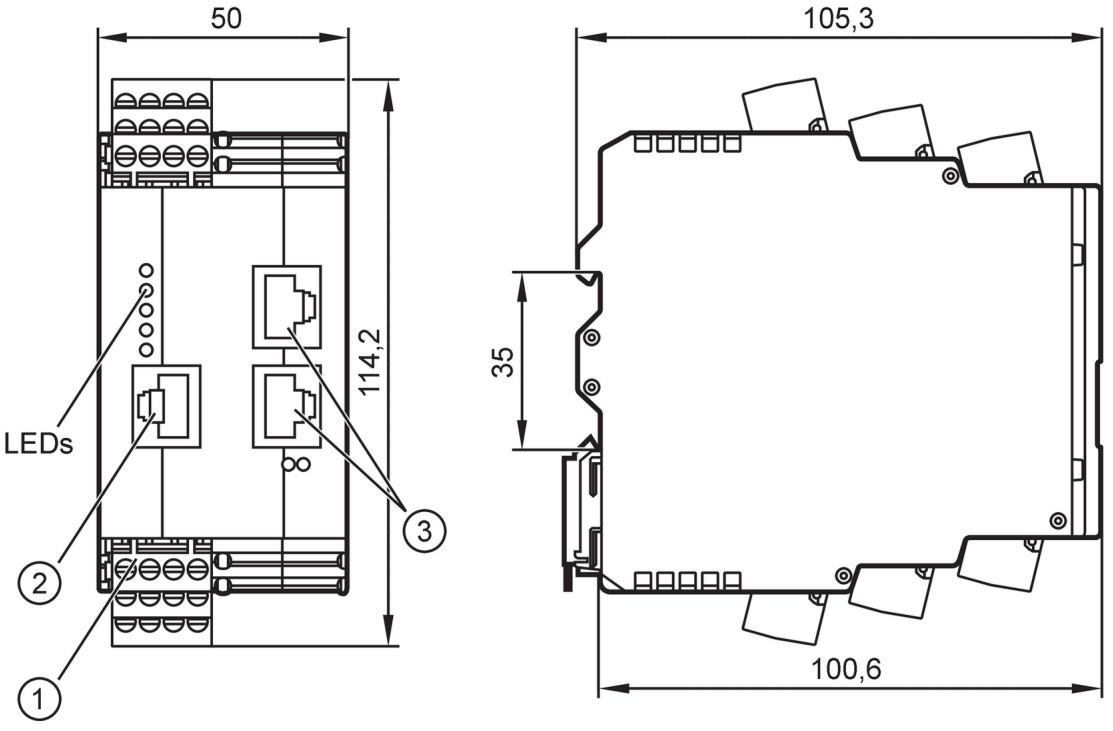

1 COMBICON connector
2 Ethernet interface
3 fieldbus interface

Application		
Design		housing for DIN rail mounting, parameter setting via PC software, VES004
Application		continuous vibration monitoring
Electrical data		
Operating voltage tolerance	[%]	20
Operating voltage	[V]	24 DC; (when using the IEPE input: 24 V + 20%; IEPE = Integrated Electronics Piezo Electric)
Current consumption	[mA]	200; (24 V)
Protection class		III
Inputs / outputs		
Total number of inputs and outputs		8; (parameterisable)
Inputs		
Dynamic inputs		
Number		4
Connection		S1...S4

VSE153

Diagnostic electronics for vibration sensors

DIAGNOSTIC ELECTRONICS

Analogue input	function type	Current, dynamic
	input range	0...10 mA / IEPE / 4...20 mA
	input frequency [Hz]	0,1...12000
	Resolution	16 bit
	sampling rate	100 kSamples
Process value inputs, analogue / digital		
Number		2
Connection		IN1, IN2
Digital input	function type	pulse
	Circuit	HTL
	frequency [Hz]	0,1...100000
Analogue input	function type	Current
	input range [mA]	4...20
	Resolution	12 bit
Outputs		
Max. load [Ω]		500
Short-circuit protection		yes
Type of short-circuit protection		pulsed
Overload protection		yes
Multi-function outputs, analogue / digital		
Number		1
Connection		OU1
Digital output	Electrical design	PNP
	Output function	normally open / normally closed (configurable)
Analogue output	function type	Current
	output range [mA]	4...20
Digital outputs		
Number		1
Connection		OU2
Digital output	Electrical design	PNP
	Output function	normally open / normally closed (configurable)
Interfaces		
Communication interface		Ethernet
Number of Ethernet interfaces		1
Note on interfaces		CC-C (Conformance Class C) (IRT switch)
		Netload Class III
		SNMP (Simple Network Management Protocol)
		MRP (Media Redundancy Protocol)
		supported network topologies: line
		ring
Ethernet		
Transmission standard		10Base-T; 100Base-TX
Transmission rate		10/100 MBit/s
Connector type		RJ45

VSE153

Diagnostic electronics for vibration sensors

DIAGNOSTIC ELECTRONICS

Factory settings		IP address: 192.168.0.1	
Ethernet Config			
Protocol		TCP/IP	
Modbus			
Transmission standard		100Base-TX	
Transmission rate		100 MBit/s	
Factory settings		IP address: 0.0.0.0	
		subnet mask: 0.0.0.0	
		gateway IP address: 0.0.0.0	
		MAC address: see type label	
Modbus TCP			
Protocol		Modbus TCP	
Operating conditions			
Ambient temperature	[°C]	0...60	
Storage temperature	[°C]	0...60	
Protection		IP 20	
Tests / approvals			
EMC		EN IEC 61000-6-2	
		EN IEC 61000-6-4	
MTTF	[years]	91	
UL approval		Ta	0...60 °C
		Enclosure type	open Type
		voltage supply	Limited Voltage/Current
		UL approval no.	L001
Mechanical data			
Weight	[g]	414.6	
Type of mounting		mounting on DIN rail; (TH35 (EN 60715))	
Dimensions	[mm]	114.2 x 50 x 105.3	
Materials		Housing: PA	
Data memories			
History memory		yes	
Data memory buffered		yes	
Data memory type		ring memory; FIFO	
Real-time clock		yes	
Memory location		internal	
Memory interval		min. 1 min	
Memory size		881664 data records	
Accessories			
Accessories (optional)		cross-over Ethernet patch cable for the direct connection to the PC	
Remarks			
Pack quantity		1 pcs.	

VSE153

Diagnostic electronics for vibration sensors

DIAGNOSTIC ELECTRONICS

Electrical connection

COMBICON: ; Maximum cable length: 250 m

Connection

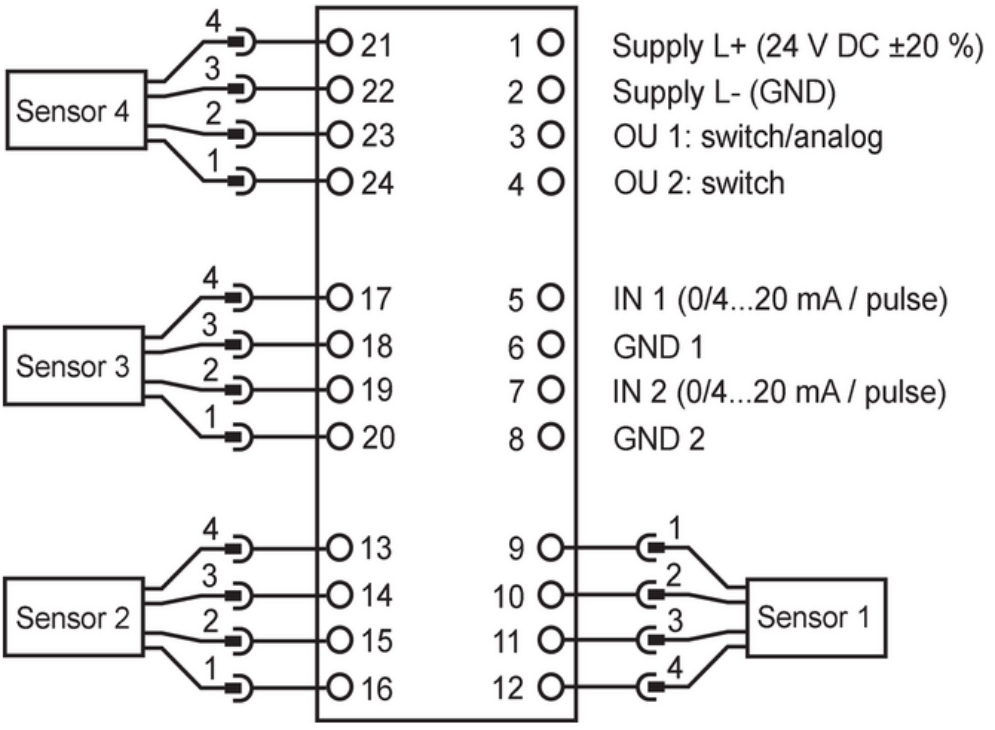

Electrical connection - Ethernet

Connector: RJ45; Contacts: 4

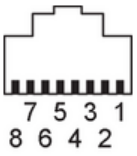

1	TxD +
2	TxD -
3	RxD +
4	n.c.
5	n.c.
6	RxD -
7	n.c.
8	n.c.