DV2131

1-segment signal lamp

LED-Lamp/IOL/Buzzer/Button

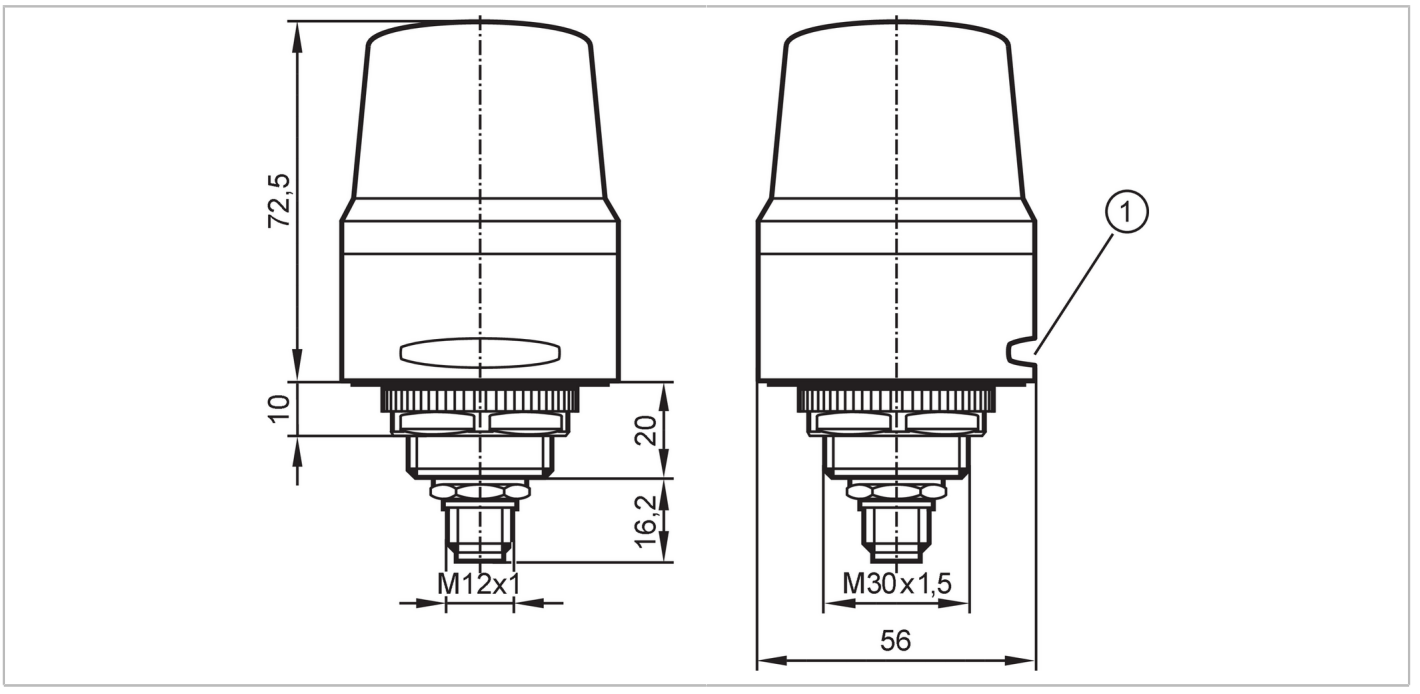

Application			
Application		signalling machine conditions	
Electrical data			
Operating voltage	[V]	18...30 DC; (to SELV/PELV ; "supply class 2" to cURus)	
Nominal voltage DC	[V]	24	
Current consumption	[mA]	< 90	
Switch-on peak current	[mA]	400	
Switch-on peak current duration	[ms]	50	
Interfaces			
Communication interface		IO-Link	
Transmission type		COM2 (38,4 kBaud)	
IO-Link revision		1.1	
SDCI standard		IEC 61131-9	
SIO mode		yes	
Required master port type		A	
Min. process cycle time	[ms]	8	
Supported DeviceIDs		**Type of operation**	**DeviceID**
		default	1176
Operating conditions			
Ambient temperature	[°C]	-25...50	
Storage temperature	[°C]	-40...75	
Max. relative air humidity	[%]	90	
Max. height above sea level	[m]	4000	
Protection		IP 65	

DV2131

1-segment signal lamp

LED-Lamp/IOL/Buzzer/Button

Pollution degree		2
Tests / approvals		
MTTF	[years]	212
Mechanical data		
Weight	[g]	169.5
Dimensions	[mm]	Ø 56 / L = 72.5
Materials		housing: ABS; lens: PC
Displays / operating elements		
Display		LED segment, red / green / yellow / blue / lilac / cyan / white
Operating elements		capacitive pushbutton
Acoustic signal		buzzer
Max. sound pressure	[dB]	90
Accessories		
Accessories (optional)		mounting base, E89060
		wall bracket, E89061
		mounting adapter, E89063
		bracket with lateral cable entry, E89064
		mounting tube, E89065
		mounting tube, E89066
		mounting tube, E89067
		mounting base, E89080
Remarks		
Remarks		For further information please see the operating instructions.
Pack quantity		1 pcs.

Electrical connection - plug

Connector: M12; coding: A; Contacts: 5

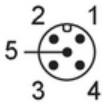

IO-Link	
1	UB+
2	not used
3	UB-
4	IO-Link
5	not used

standard mode	
1	IN1 red
2	IN2 green
3	GND
4	configurable (buzzer / Capacitive touch sensor)
5	IN3 blue

DV2131

1-segment signal lamp

LED-Lamp/IOL/Buzzer/Button

Diagrams and graphs

light intensity distribution curve

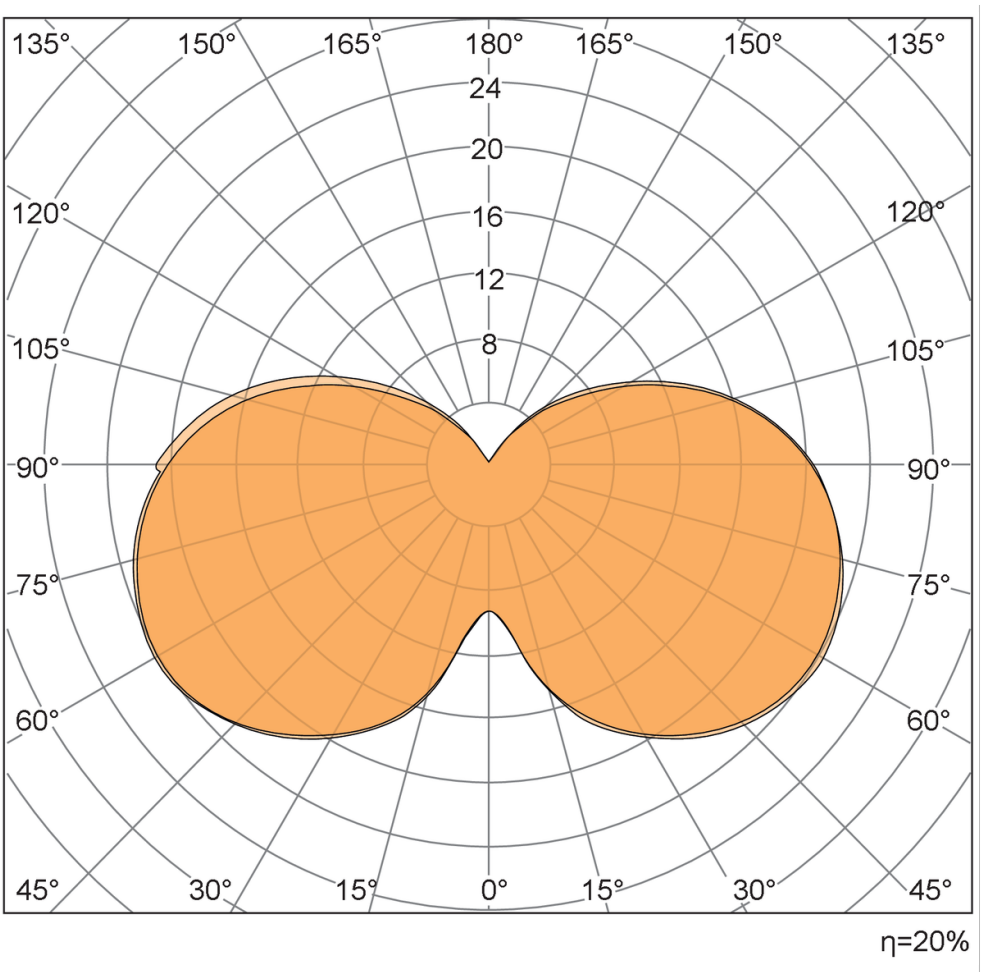

light intensity distribution curve: red

1000 lm

operating efficiency = 20%

DV2131

1-segment signal lamp

LED-Lamp/IOL/Buzzer/Button

light intensity distribution curve

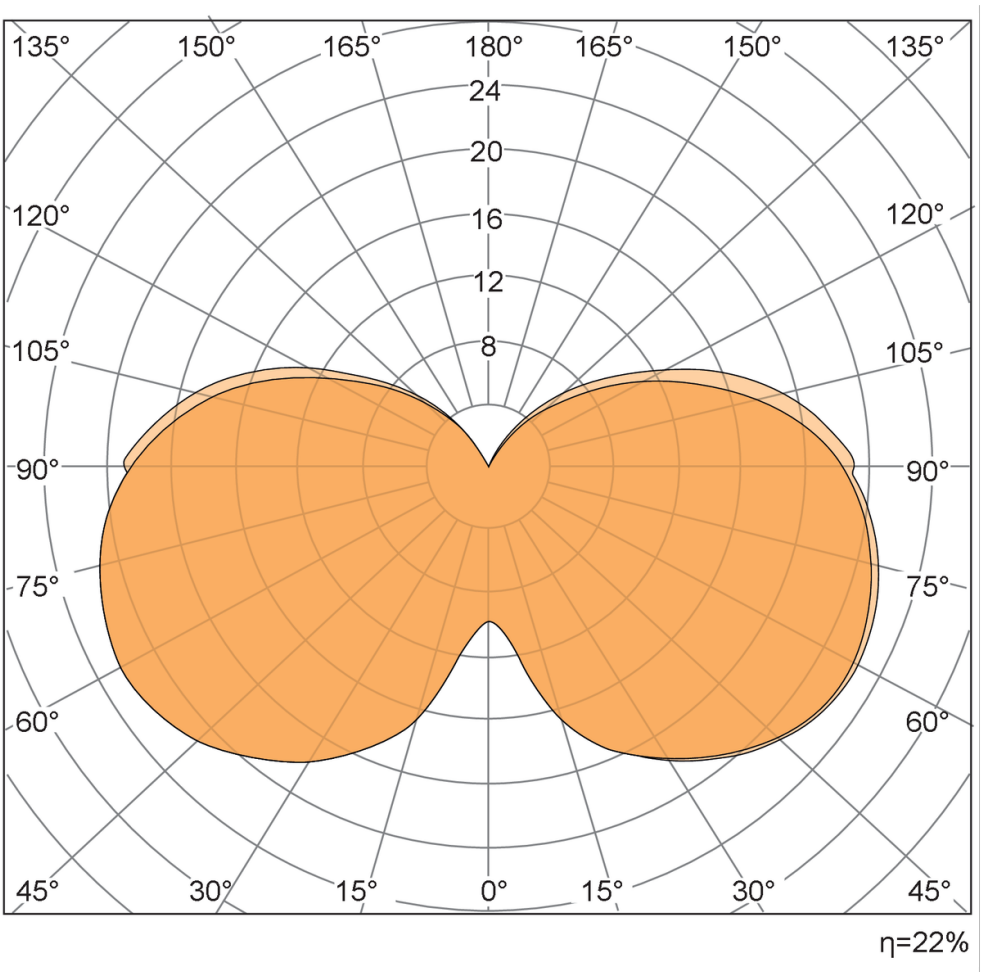

light intensity distribution curve: green

1000 lm

operating efficiency = 22%

DV2131

1-segment signal lamp

LED-Lamp/IOL/Buzzer/Button

light intensity distribution curve

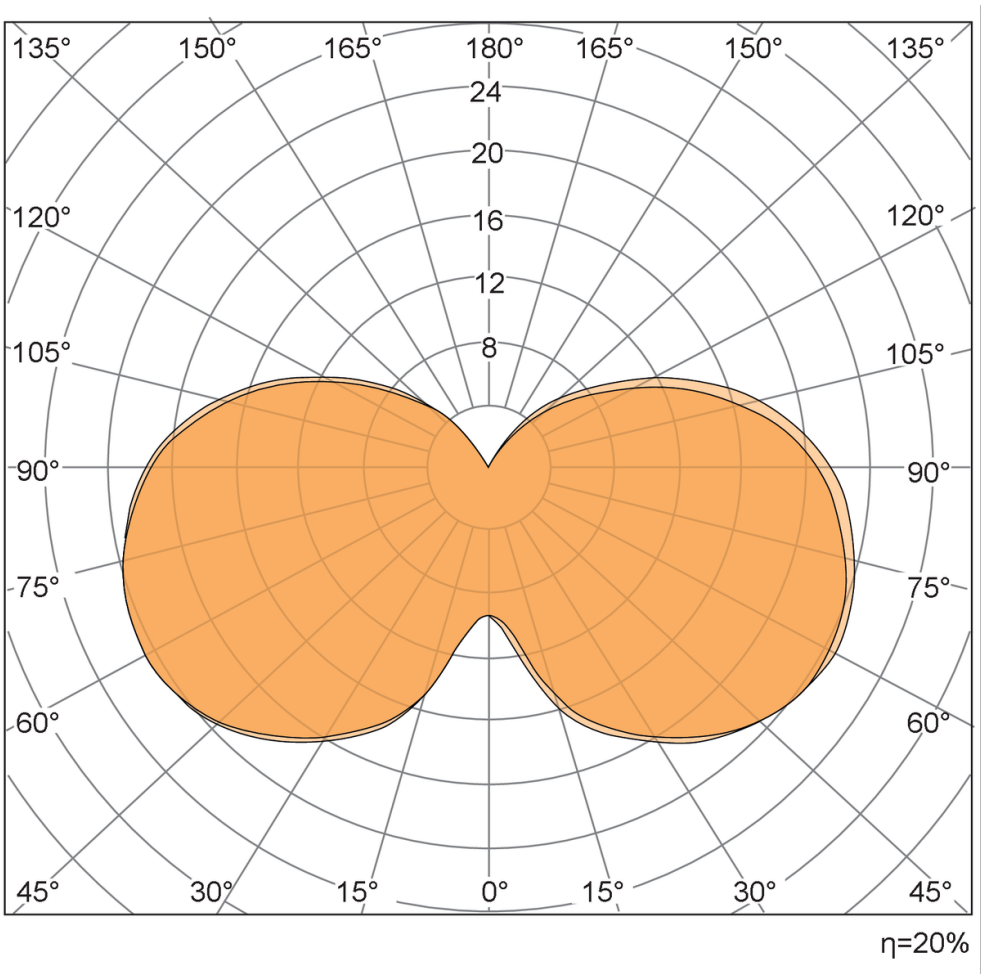

light intensity distribution curve: blue

1000 lm

operating efficiency = 20%

DV2131

1-segment signal lamp

LED-Lamp/IOL/Buzzer/Button

wall mounting

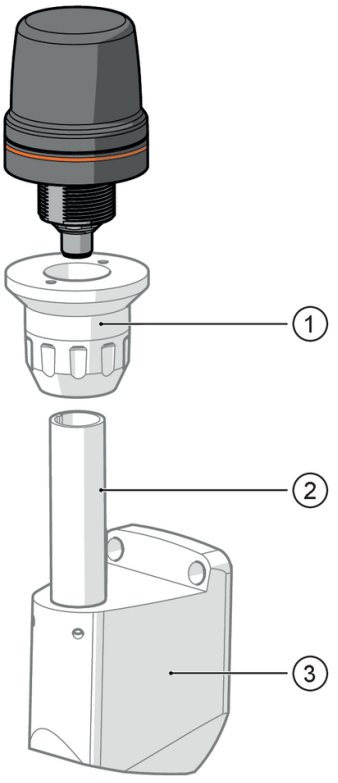

1 E89080 not supplied

2 E89065, E89066, E89067 not supplied

3 E89061 not supplied

DV2131

1-segment signal lamp

LED-Lamp/IOL/Buzzer/Button

base mounting

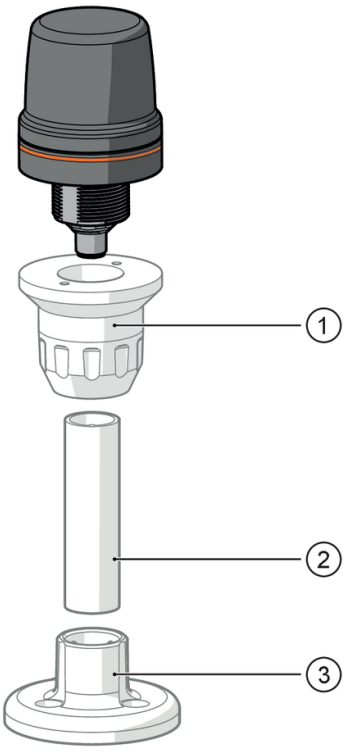

1 E89080 not supplied

2 E89065, E89066, E89067 not supplied

3 E89060 not supplied