VSA205

Accelerometer

VIBRATION SENSOR

phase-out article
Discontinuation date: 03/31/2026

Alternative articles: VSA201
When selecting an alternative article and accessories please note that technical data may differ!

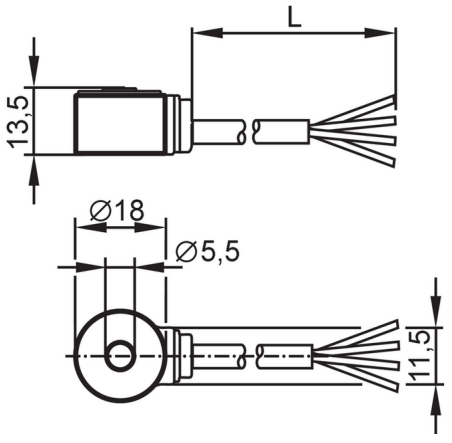

Product characteristics		
Measuring range of vibration	[g]	-150...150
Frequency range	[Hz]	1...10000
Measuring principle		capacitive
Application		
Special feature		Screened cable; Drag chain suitability
Design		for connection to external diagnostic electronics VSE
Application		vibration detection
Electrical data		
Operating voltage	[V]	7.2...10.8 DC
Current consumption	[mA]	< 15
Min. insulation resistance	[MΩ]	100; (500 V DC)
Protection class		III
Reverse polarity protection		yes
Sensor type		microelectromechanical system (MEMS)
Outputs		
Analogue current output	[mA]	0...10
Max. load	[Ω]	300
Measuring/setting range		
Measuring range of vibration	[g]	-150...150
Frequency range	[Hz]	1...10000
Measuring principle		capacitive
Sensitivity	[µA/g]	35.5
Number of measurement axes		1

VSA205

Accelerometer

VIBRATION SENSOR

Accuracy / deviations			
Linearity deviation		0,2 %	
Operating conditions			
Ambient temperature	[°C]	-20...80	
Storage temperature	[°C]	-20...80	
Max. relative air humidity	[%]	80; (40 °C: 50 % non condensing)	
Protection		IP 67	
Tests / approvals			
EMC		EN 61000-6-2	
		EN 61000-6-3	
Shock resistance		DIN EN 60068-2-27	50 g 11 ms
Vibration resistance		DIN EN 60068-2-6	20 g / 10 ... 2000 Hz
MTTF	[years]	2104	
UL approval		Ta	80 °C
		Enclosure type	Type 1
		voltage supply	Limited Voltage/Current
		File number UL	E251902
Mechanical data			
Weight	[g]	309.7	
Type of mounting		mounting screw	
Materials		housing: stainless steel (316L/1.4404)	
Tightening torque	[Nm]	5	
Mechanische Überlastfestigkeit	[g]	500	
Drag chain suitability		yes	
Drag chain suitability		bending radius for fixed installation	: min. 4 x cable diameter
		bending radius for flexible use	: min. 15 x cable diameter
Accessories			
Items supplied		head cap screw: 1 x (M5 x 20 mm), Torx 15	
Remarks			
Pack quantity		1 pcs.	

Electrical connection

Cable: 10 m, PUR, Ø 4 mm, shielded; Maximum cable length: 250 m; drain wire connected to the housing; 4 x 0.14 mm²

blue	GND
black	test
brown	L+
white	Out
Screen	drain wire