# DV2500

## 5-segment light tower with IO-Link control

LED-Tower-5/IOL/Bracket

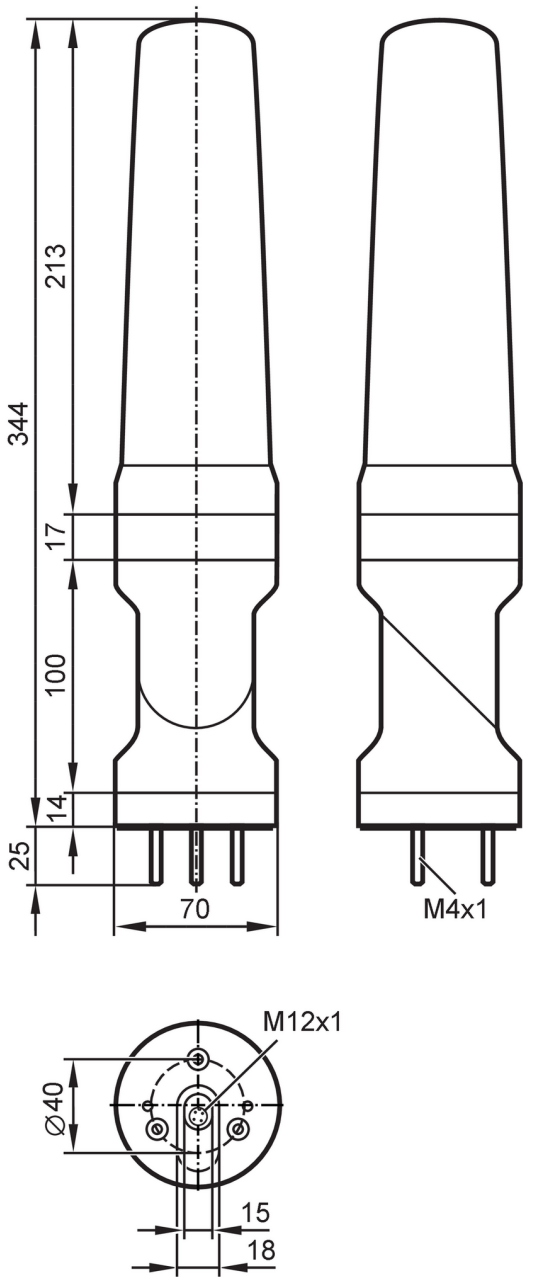


IO-Link

| | | |
|---|---|---|
| **Application** | | |
| Application | | signalling machine conditions |
| **Electrical data** | | |
| Operating voltage | [V] | 18...30 DC; (to SELV/PELV) |
| Nominal voltage DC | [V] | 24 |
| Current consumption | [mA] | < 200 |
| **Inputs** | | |
| Input current High | [mA] | 6 |
| **Interfaces** | | |
| Communication interface | | IO-Link |

# DV2500

## 5-segment light tower with IO-Link control

LED-Tower-5/IOL/Bracket

| | | | |
|---|---|---|---|
| Transmission type | | COM2 (38,4 kBaud) | |
| IO-Link revision | | 1.1 | |
| SDCI standard | | IEC 61131-9 | |
| SIO mode | | yes | |
| Required master port type | | A | |
| Min. process cycle time | [ms] | 8 | |
| Supported DeviceIDs | | **Type of operation** | **DeviceID** |
| | | Default | 841 |
| | | Status B | 1075 |

| **Operating conditions** | | |
|---|---|---|
| Ambient temperature | [°C] | -25...50 |
| Storage temperature | [°C] | -40...75 |
| Max. relative air humidity | [%] | 90 |
| Air pressure | [kPa] | < 106 |
| Max. height above sea level | [m] | 2000 |
| Protection | | IP 65 |

| **Tests / approvals** | | |
|---|---|---|
| MTTF | [years] | 438 |

| **Mechanical data** | | |
|---|---|---|
| Weight | [g] | 586 |
| Type of mounting | | mounting base |
| Dimensions | [mm] | Ø 70 / L = 344 |
| Materials | | housing: ABS; lens: PC |

| **Displays / operating elements** | | |
|---|---|---|
| Display | LED segment | 5 x 4 LED |

| **Accessories** | |
|---|---|
| Accessories (optional) | mounting base, E89060 |
| | wall bracket, E89061 |
| | mounting adapter, E89063 |
| | bracket with lateral cable entry, E89064 |
| | mounting tube, E89065 |
| | mounting tube, E89066 |
| | mounting tube, E89067 |

| **Remarks** | |
|---|---|
| Remarks | For further information please see the operating instructions. |
| Pack quantity | 1 pcs. |

**Electrical connection - plug**

Connector: M12; coding: A; Contacts: 4

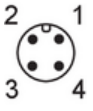


| | |
|---|---|
| 1 | UB+ |
| 2 | not used |
| 3 | UB- |
| 4 | IO-Link (C/Q) |

# DV2500

## 5-segment light tower with IO-Link control

LED-Tower-5/IOL/Bracket

## Diagrams and graphs

wall mounting

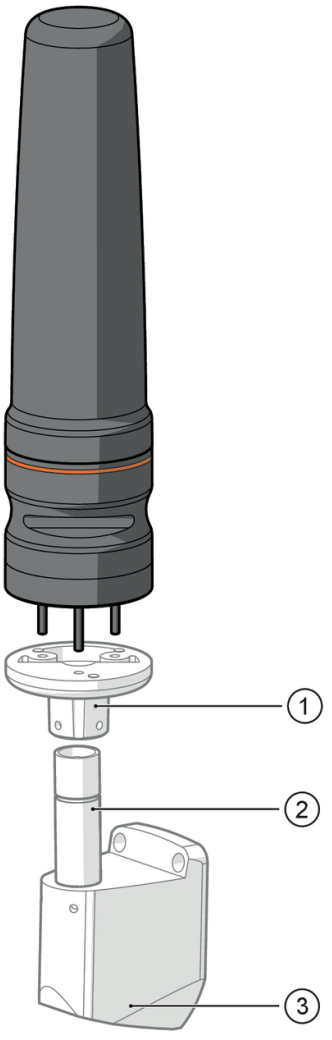


1 E89060 not supplied

2 E89065, E89066, E89067 not supplied

3 E89061 not supplied

# DV2500

## 5-segment light tower with IO-Link control

LED-Tower-5/IOL/Bracket

base mounting

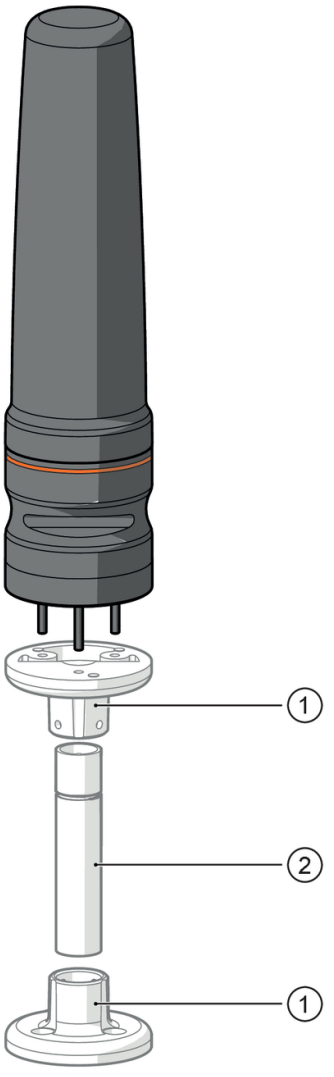


1 E89060 not supplied

2 E89065, E89066, E89067 not supplied

# DV2500

## 5-segment light tower with IO-Link control

**LED-Tower-5/IOL/Bracket**

Installation

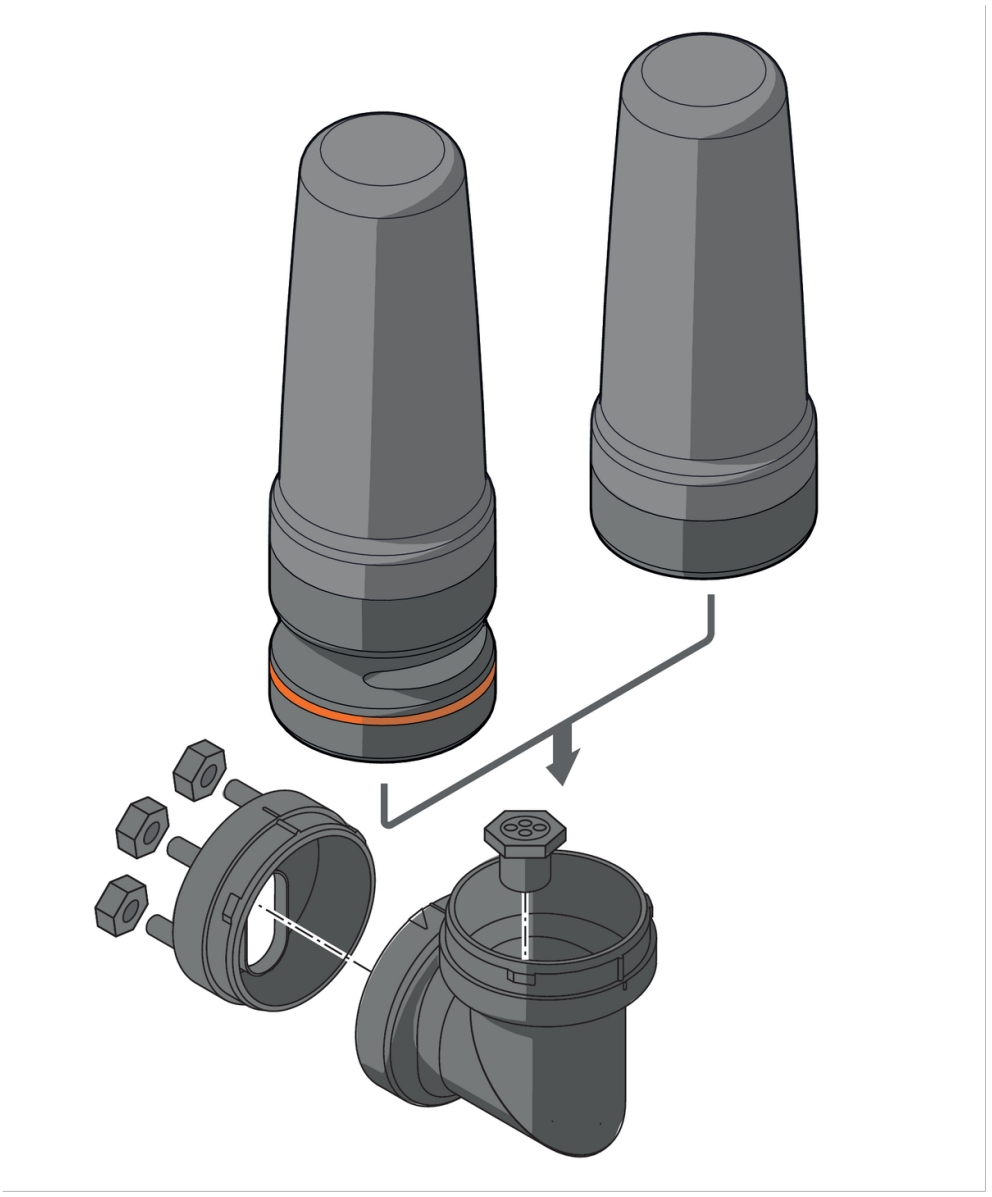

# DV2500

## 5-segment light tower with IO-Link control

**LED-Tower-5/IOL/Bracket**

Installation

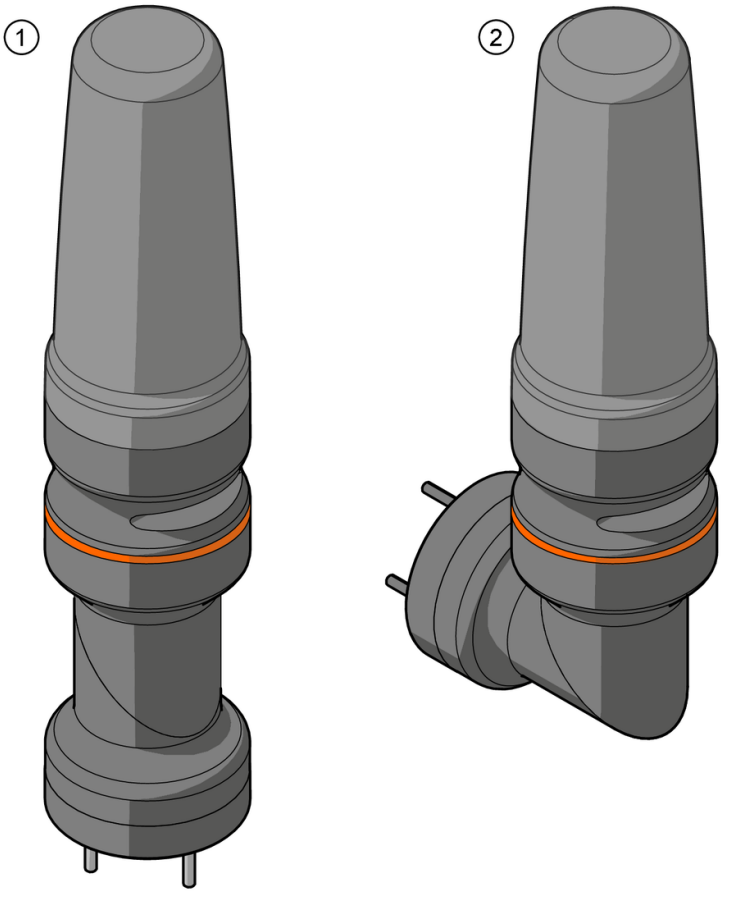


1 mounting on a horizontal surface

2 mounting on a vertical surface