# EBT010

## Y-splitter

ZDO2H040VAS0000-00STGH050VAS

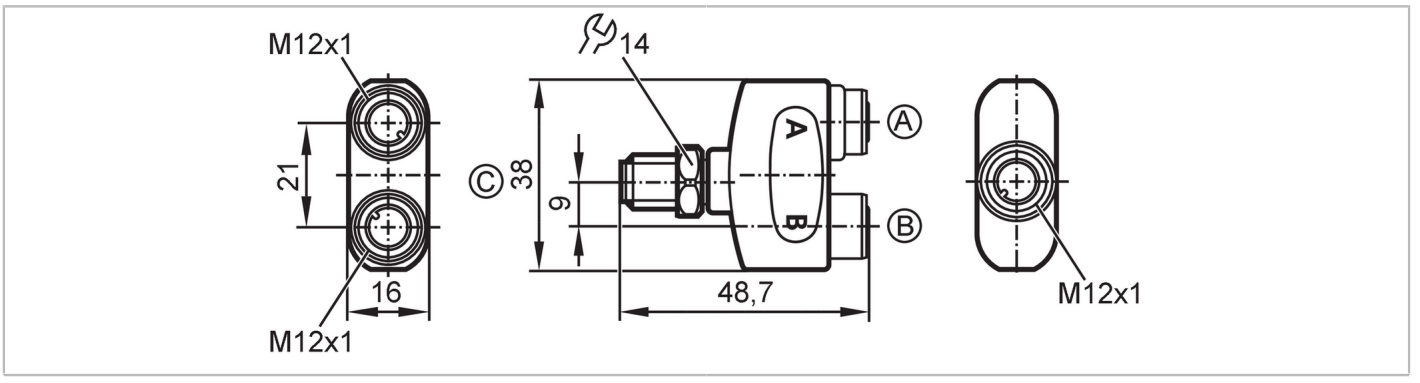


| | | |
|---|---|---|
| **Application** | | |
| Special feature | | Free from silicone; Gold-plated contacts |
| Application | | hygienic and wet areas in the food industry |
| Free from silicone | | yes |
| **Electrical data** | | |
| Operating voltage | [V] | < 60 AC/DC;  (cULus: 30 AC / 42 DC) |
| Protection class | | II |
| Max. current load per module/slot | [A] | 4 |
| Max. current load total | [A] | 4 |
| **Operating conditions** | | |
| Ambient temperature | [°C] | -25...100 |
| Note on ambient temperature | | cULus: ...65 °C |
| Storage temperature | [°C] | -25...55 |
| Storage humidity | [%] | 10...100 |
| Other climatic conditions for storage according to stated class | | 1K22/ DIN 60721-3-1 |
| Protection | | IP 65; IP 67; IP 68; IP 69K |
| **Tests / approvals** | | |
| UL approval | voltage supply | Class 2 |
| | File number UL | E191684 |
| **Mechanical data** | | |
| Weight | [g] | 35.7 |
| Materials | | housing: PA orange |
| Material nut | | stainless steel (316L/1.4404) |
| Sealing material | | EPDM |
| **Remarks** | | |
| Pack quantity | | 1 pcs. |

# EBT010

## Y-splitter

ZDO2H040VAS0000-00STGH050VAS

### Electrical connection - plug

Connector: 1 x M12; coding: A; Contacts: 5, gold-plated; Locking: stainless steel (316L/1.4404); Tightening torque: 0.6...1.5 Nm

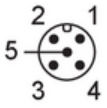


### Connection

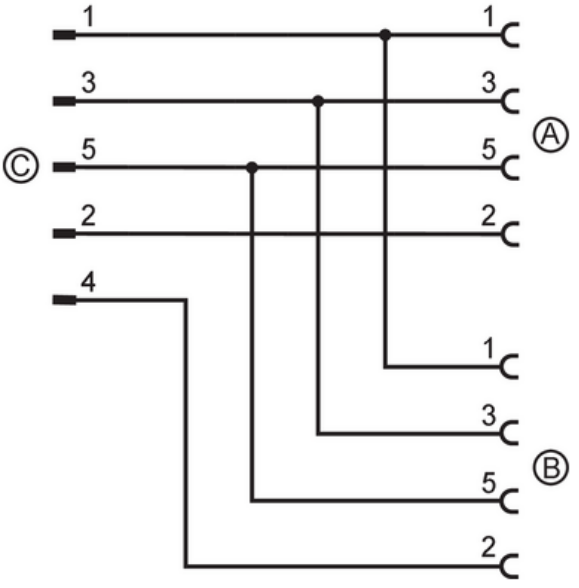


connection to IEC 61076-2-101

### Electrical connection - socket

Connector: 2 x M12; coding: A; Contacts: 4, gold-plated; Locking: stainless steel (316L/1.4404); Sealing: EPDM; Tightening torque: 0.6...1.5 Nm

