VSE950

Diagnostic electronics for vibration sensors

DIAGNOSTIC ELECTRONICS

phase-out article

Discontinuation date: 03/31/2027

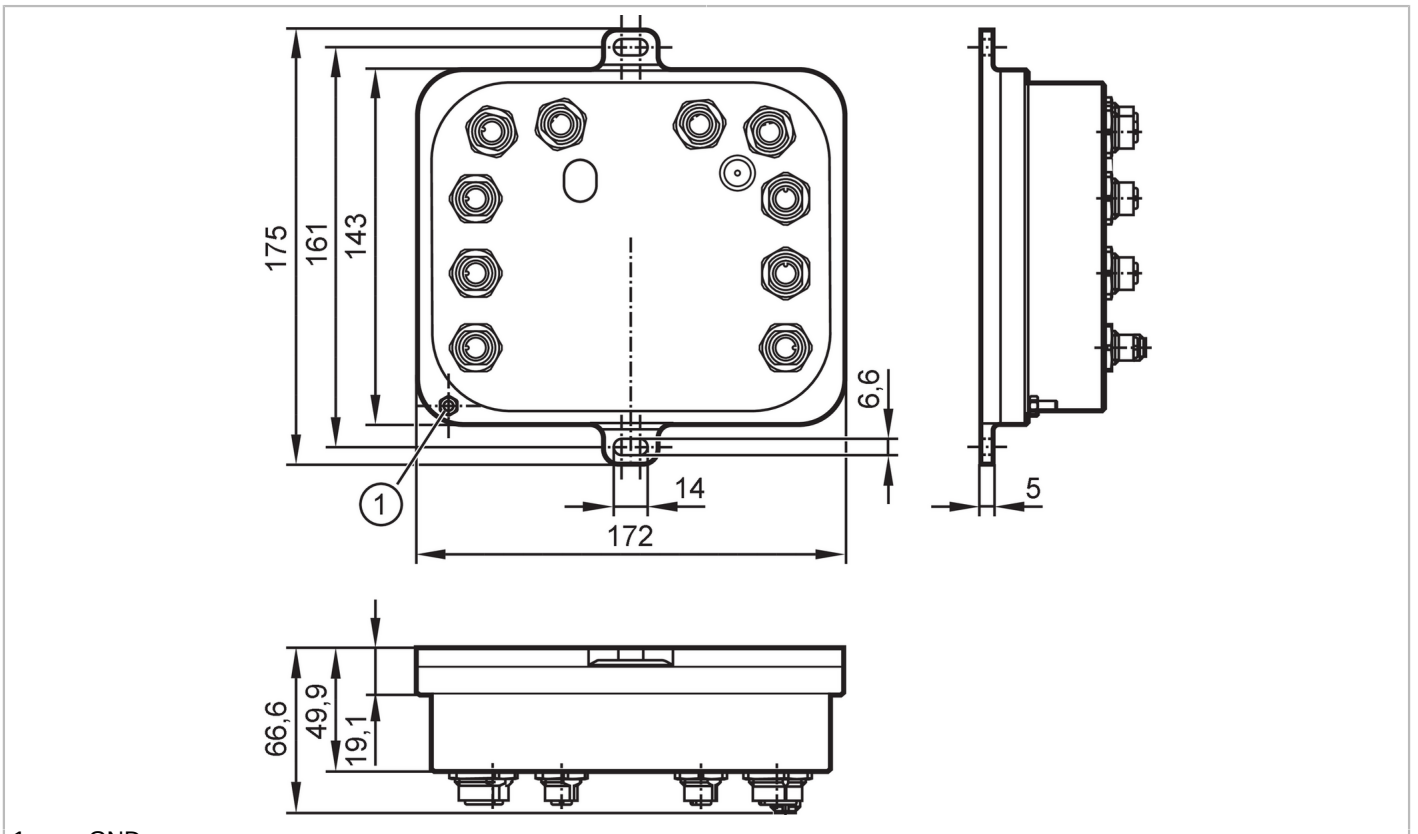

1 GND

Product characteristics		
Communication interface		Ethernet
Application		
Design		parameter setting via PC software VES004
Application		continuous vibration monitoring
Electrical data		
Operating voltage tolerance	[%]	20
Operating voltage	[V]	24 DC; (when using the IEPE input: 24 V + 20% IEPE = Integrated Electronics Piezo Electric)
Current consumption	[mA]	200; ((24 V DC))
Protection class		III
Inputs / outputs		
Total number of inputs and outputs		8; (parameterisable)
Inputs		
Total number of inputs		6
Dynamic inputs		
Number		4
Connection		S1...S4

VSE950

Diagnostic electronics for vibration sensors

DIAGNOSTIC ELECTRONICS

Analogue input		function type	Current, dynamic
		input range	0...10 mA / IEPE / 4...20 mA
		input frequency [Hz]	0,1...12000
		Resolution	16 bit
		sampling rate	100 kSamples
Process value inputs, analogue / digital			
Number		2	
Connection		IN1 (pulse), IN2 (Current)	
Digital input		function type	pulse
		Circuit	HTL
		frequency [Hz]	0,1...100000
Analogue input		function type	Current
		input range [mA]	4...20
		Resolution	12 bit
Outputs			
Max. load	[Ω]	500	
Short-circuit protection		yes	
Type of short-circuit protection		pulsed	
Overload protection		yes	
Multi-function outputs, analogue / digital			
Number		1	
Connection		OU1/Supply	
Digital output		Electrical design	PNP
		Output function	normally open / normally closed (configurable)
Analogue output		function type	Current
		output range [mA]	4...20
Digital outputs			
Number		1	
Connection		OU2	
Digital output		Electrical design	PNP
		Output function	normally open / normally closed (configurable)
Interfaces			
Communication interface		Ethernet	
Number of Ethernet interfaces		1	
Ethernet Config			
Transmission standard		10Base-T; 100Base-TX	
Transmission rate		10/100 MBit/s	
Connector type		M12	
Protocol		TCP/IP	
Factory settings		IP address: 192.168.0.1	
PROFINET IE1;IE2			
Transmission standard		100Base-TX	
Transmission rate		100 MBit/s	

VSE950

Diagnostic electronics for vibration sensors

DIAGNOSTIC ELECTRONICS

Connector type		M12	
Protocol		PROFINET IO	
Factory settings		IP address: 0.0.0.0	
		subnet mask: 0.0.0.0	
		gateway IP address: 0.0.0.0	
		MAC address: see type label	
Note on interfaces		CC-C (Conformance Class C) (IRT switch)	
		Netload Class III	
		SNMP (Simple Network Management Protocol)	
		MRP (Media Redundancy Protocol)	
		supported network topologies: line	
		ring	
Operating conditions			
Ambient temperature	[°C]	0...60	
Storage temperature	[°C]	0...60	
Protection		IP 67	
Tests / approvals			
EMC		EN 61000-4-2 ESD	4 kV contact discharge / 15 kV air discharge
		EN 61000-4-3	10 V/m (80...2700 MHz)
		EN 61000-4-4 Burst	4 kV capacitive coupling probe, earthed
		EN 61000-4-6	10 V 0,15...80 MHz
		EN 61000-6-4	industrial environments
MTTF	[years]	92	
Mechanical data			
Weight	[g]	1388.2	
Housing		rectangular	
Type of mounting		backplane mounting	
Dimensions	[mm]	175 x 172 x 66.6	
Materials		housing: aluminium alloy black anodised EN AW-5083	
Data memories			
History memory		yes	
Data memory buffered		yes	
Data memory type		ring memory; FIFO	
Real-time clock		yes	
Memory location		internal	
Memory interval		min. 1 min	
Memory size		881664 data records	
Accessories			
Accessories (optional)		cross-over Ethernet patch cable for the direct connection to the PC	
Remarks			
Pack quantity		1 pcs.	
Electrical connection			
Connection			

VSE950

Diagnostic electronics for vibration sensors

DIAGNOSTIC ELECTRONICS

Electrical connection - Sensor 1...4

Connector: 4 x M12; coding: A; Contacts: 4

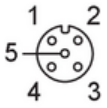

1 L+
2 Signal
3 GND
4 Test

Electrical connection - Config / IE1 / IE2

Connector: 3 x M12; coding: D; Contacts: 4



1 TxD+
2 RxD+
3 TxD-
4 RxD-

Electrical connection - IN 1

Connector: 1 x M12; coding: A; Contacts: 3; Maximum cable length: 30 m

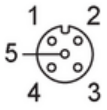

1 24 V DC
2 -
3 GND
4 IN 1 (pulses)

Electrical connection - IN 2

Connector: 1 x M12; coding: A; Contacts: 3; Maximum cable length: 30 m

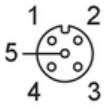

1 24 V DC
2 IN 2 (4..20mA)
3 GND
4 -

Electrical connection - OU / Supply

Connector: 1 x M12; coding: A; Contacts: 4

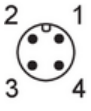

1 24 V DC
2 analogue / digital
3 GND
4 OU2: switch