DV1254

LED strip RGBW

LED-Strip-RGBW-transp-1000mm-fb

IO-Link-capable with DP1615

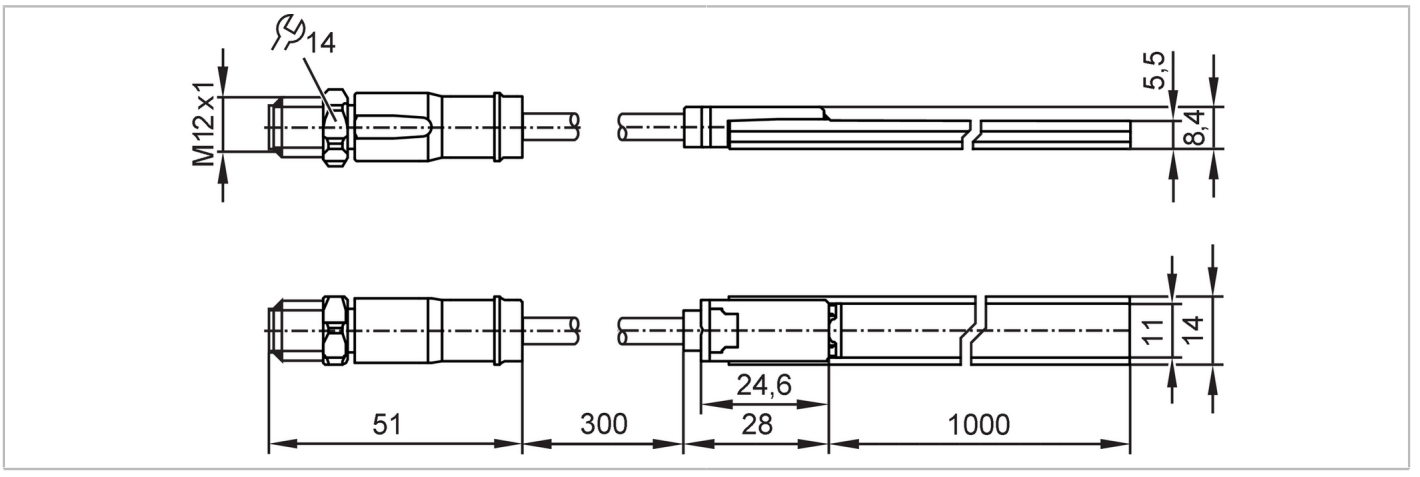

Application		
Special feature		Free from silicone; Gold-plated contacts; Drag chain suitability
Application		signalling machine conditions; hygienic and wet areas in the food industry
Free from silicone		yes
Electrical data		
Operating voltage	[V]	21.6...26.4 DC
Nominal voltage DC	[V]	24; (to SELV/PELV)
Max. current consumption	[mA]	800; (red: 160; green: 160; blue: 170; white: 310)
Colour temperature	[K]	7500
Luminous flux	[lm]	red: 128; green: 364; blue: 96; white: 772
Typ. lifetime	[h]	60000
Inputs		
Input circuit of digital inputs		24 V PNP
Operating conditions		
Ambient temperature	[°C]	-20...45
Storage temperature	[°C]	-25...65
Max. relative air humidity	[%]	90
Max. height above sea level	[m]	4000
Protection		IP 68
Pollution degree		2
Tests / approvals		
Approval		EN 62471; IEC 62031
Mechanical data		
Weight	[g]	287
Dimensions	[mm]	1028 x 14 x 8.4
Materials		housing: TPU
Moulded-body material		PVC
Material nut		stainless steel (316L/1.4404)

DV1254

LED strip RGBW

LED-Strip-RGBW-transp-1000mm-fb

Sealing material	EPDM	
Drag chain suitability	yes	
Drag chain suitability	bending radius for flexible use	min. 10 x cable diameter
	travel speed	max. 3.3 m/s for a horizontal travel length of 5 m and max. acceleration of 5 m/s²
	bending cycles	> 1 Mio.
	torsional strain	± 180 °/m

Displays / operating elements

Display	signalling machine conditions	LED, multi-colour RGB
	mounting light	LED, white

Remarks

Notes	IO-Link-capable with DP1615
Pack quantity	1 pcs.

Electrical connection

Cable: 0.3 m, PVC, orange, Ø 4.9 mm; 5 x 0.34 mm² (42 x Ø 0.1 mm)

Connector: M12, straight; coding: A; Contacts: 5, gold-plated; Moulded body: PVC, orange; Locking: stainless steel (316L/1.4404); Sealing: EPDM; Tightening torque: 0.6...1.5 Nm

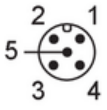

1	L+	(red)
2	L+	(green)
3	L-	
4	L+	(white)
5	L+	(blue)

Diagrams and graphs

wavelength of the red light spectrum

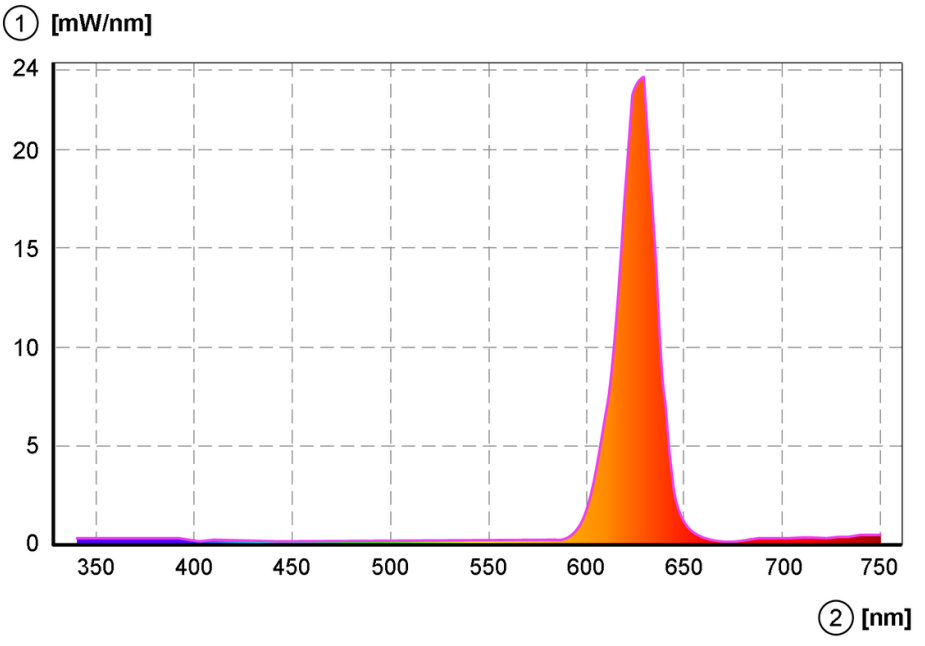

1 brightness

2 Wave length

DV1254

LED strip RGBW

LED-Strip-RGBW-transp-1000mm-fb

wavelength of the green light spectrum

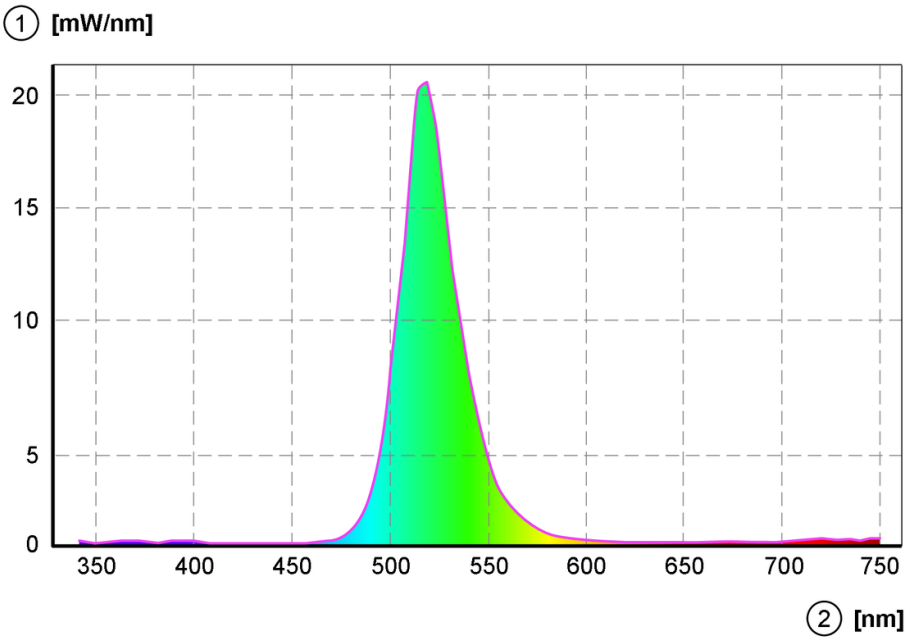

1 brightness

2 Wave length

wavelength of the blue light spectrum

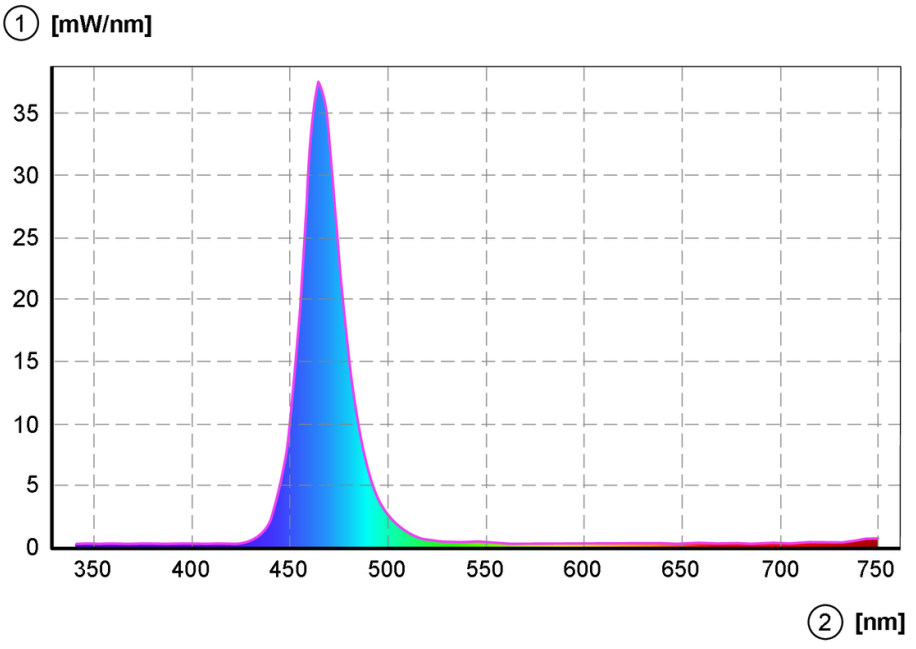

1 brightness

2 Wave length

DV1254

LED strip RGBW

LED-Strip-RGBW-transp-1000mm-fb

wavelength of the white light spectrum

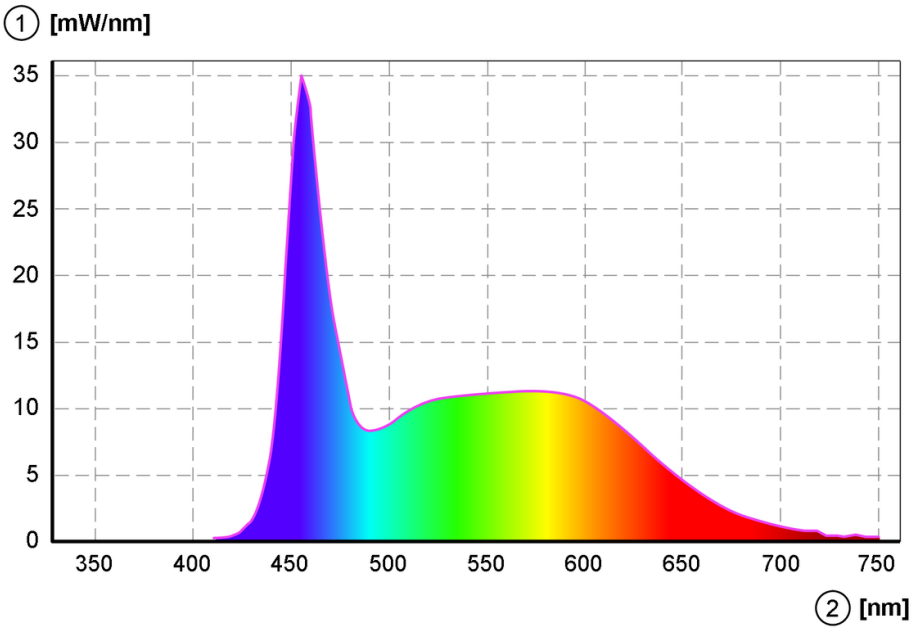

1 brightness

2 Wave length