DV1501

5-segment light tower with IO-Link data output

LED-Tower-5/MDA/Bracket

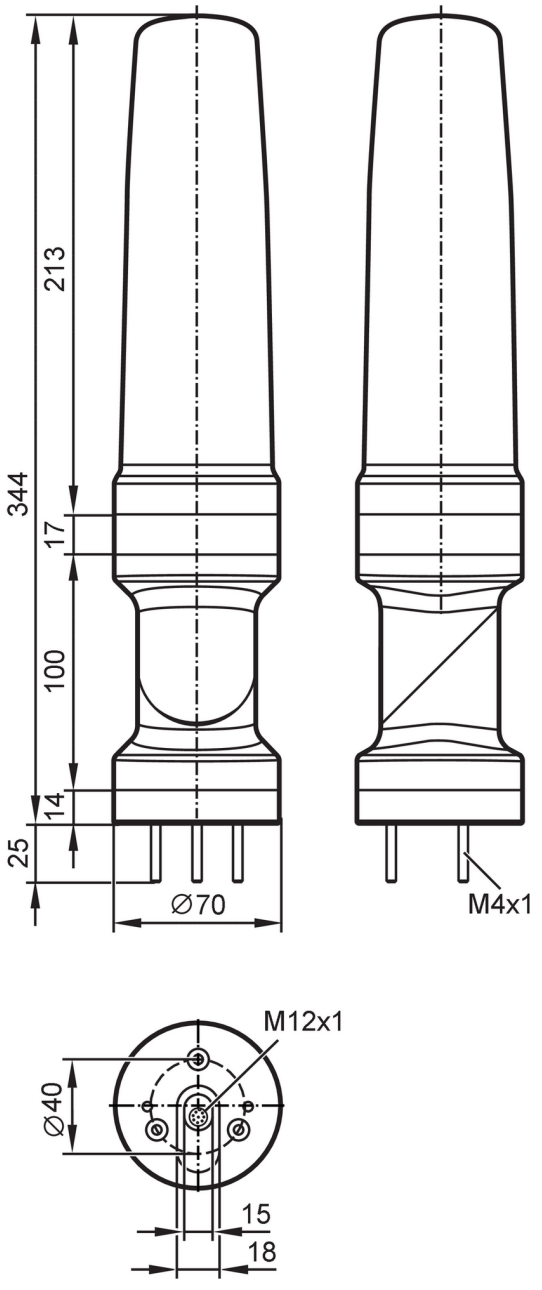

Application		
Application		Display and transfer of machine states to higher-level evaluation software via IO-Link
Electrical data		
Operating voltage	[V]	18...30 DC; (to SELV/PELV)
Nominal voltage DC	[V]	24
Current consumption	[mA]	< 200
Inputs / outputs		
Number of inputs and outputs		Number of digital inputs: 6
Inputs		
Number of digital inputs		6

DV1501

5-segment light tower with IO-Link data output

LED-Tower-5/MDA/Bracket

Input current High	[mA]	6	
Interfaces			
Communication interface		IO-Link	
Transmission type		COM2 (38,4 kBaud)	
IO-Link revision		1.1	
SDCI standard		IEC 61131-9	
Profiles		Common - I&D	Identification and Diagnosis
SIO mode		yes	
Required master port type		A	
Min. process cycle time	[ms]	8	
Supported DeviceIDs		**Type of operation**	**DeviceID**
		default	1700
Operating conditions			
Ambient temperature	[°C]	-25...50	
Storage temperature	[°C]	-40...75	
Max. relative air humidity	[%]	90	
Air pressure	[kPa]	< 106	
Max. height above sea level	[m]	2000	
Protection		IP 65	
Mechanical data			
Weight	[g]	540.5	
Type of mounting		mounting base	
Dimensions	[mm]	Ø 70 / L = 344	
Materials		housing: ABS; lens: PC	
Displays / operating elements			
Display		status	1 x LED, green
		LED segment	5 x 4 LED
Accessories			
Accessories (optional)		mounting base, E89060	
		wall bracket, E89061	
		mounting adapter, E89063	
		bracket with lateral cable entry, E89064	
		mounting tube, E89065	
		mounting tube, E89066	
		mounting tube, E89067	
Remarks			
Remarks		For further information please see the operating instructions.	
Pack quantity		1 pcs.	

Electrical connection - plug

Connector: M12; coding: A; Contacts: 8

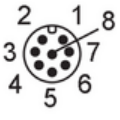

DV1501

5-segment light tower with IO-Link data output

LED-Tower-5/MDA/Bracket

Connection

1	digital input LED segment 5
2	not used
3	digital input LED segment 3
4	digital input LED segment 2
5	GND
6	digital input LED segment 1
7	digital input LED segment 4
8	IO-Link (C/Q)

Diagrams and graphs

Installation

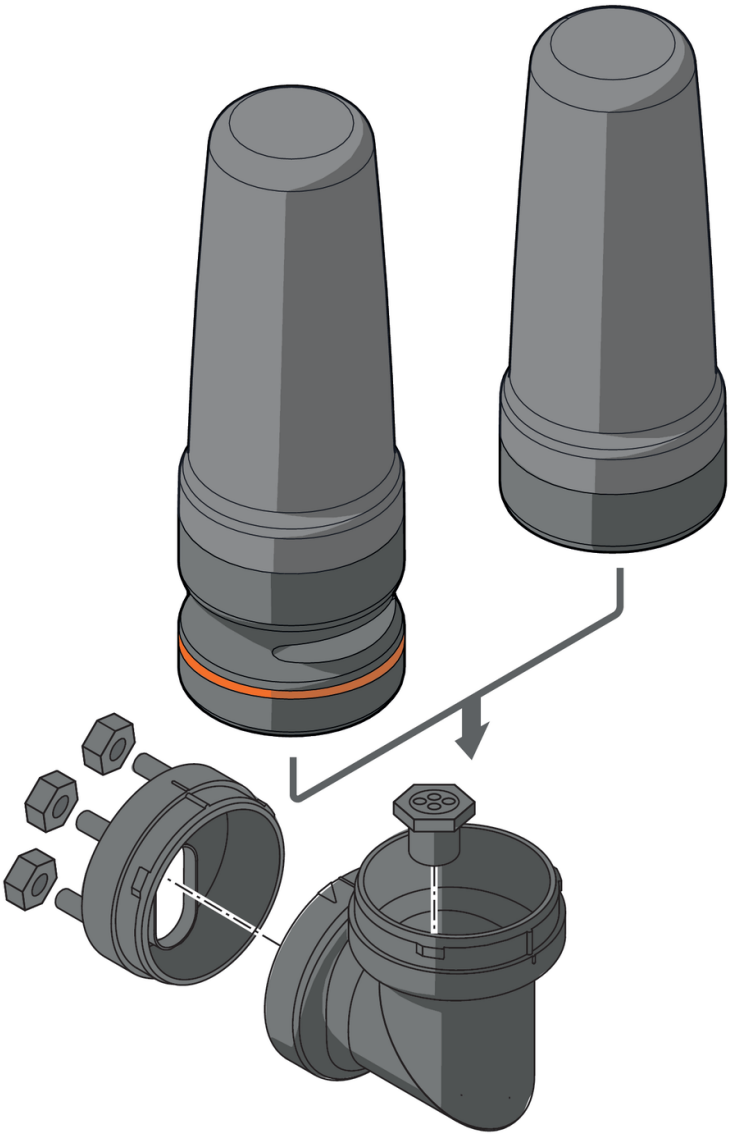

DV1501

5-segment light tower with IO-Link data output

LED-Tower-5/MDA/Bracket

Installation

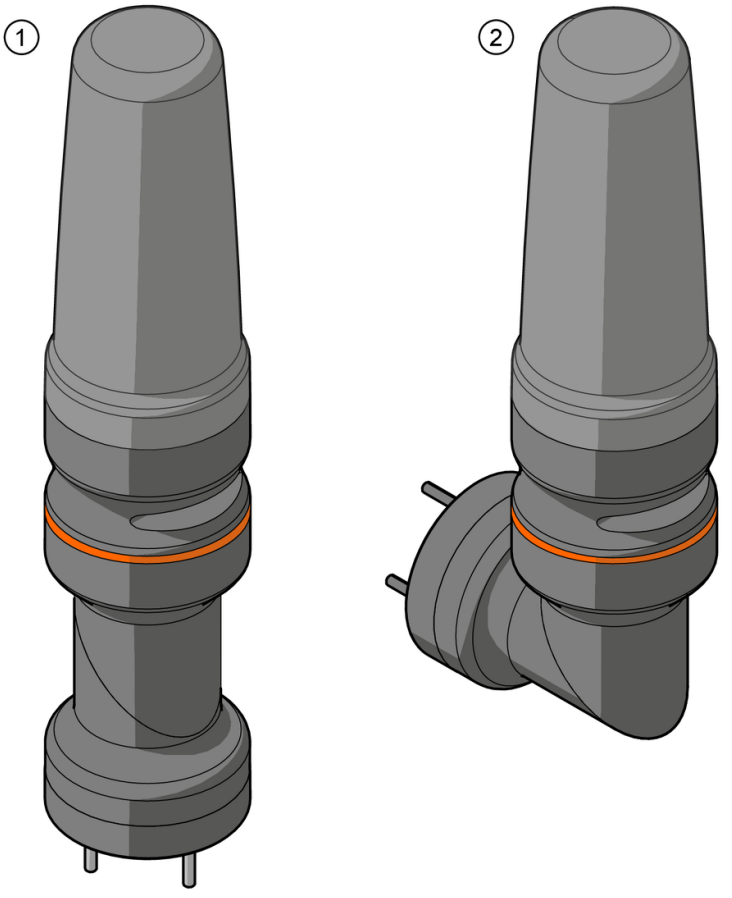

1 mounting on a horizontal surface

2 mounting on a vertical surface

DV1501

5-segment light tower with IO-Link data output

LED-Tower-5/MDA/Bracket

base mounting

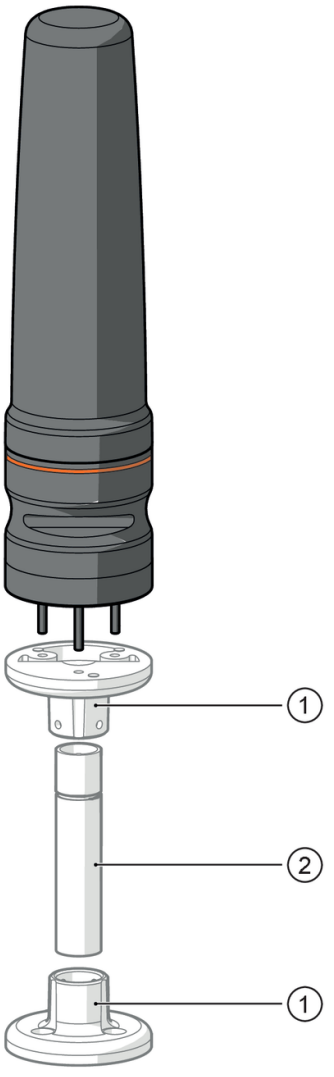

1 E89060 not supplied

2 E89065, E89066, E89067 not supplied

DV1501

5-segment light tower with IO-Link data output

LED-Tower-5/MDA/Bracket

wall mounting

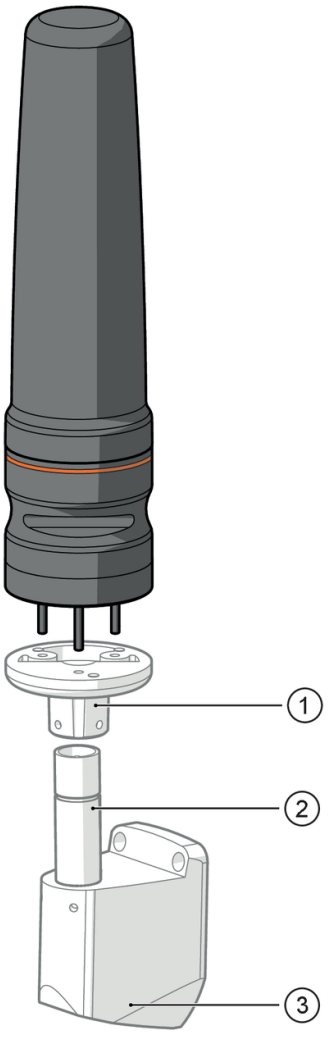

1 E89060 not supplied

2 E89065, E89066, E89067 not supplied

3 E89061 not supplied