VSP003

Accelerometer

VIBRATION SENSOR

phase-out article

Alternative articles: VSP110
When selecting an alternative article and accessories please note that technical data may differ!

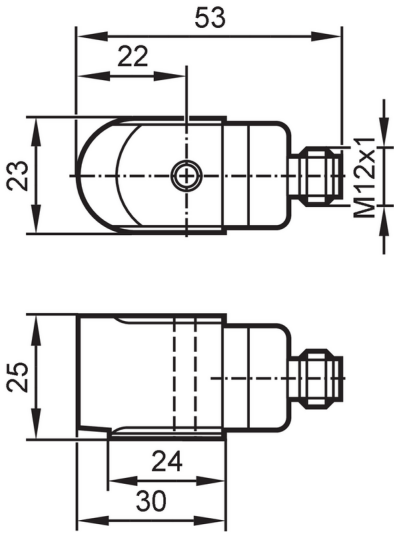

Product characteristics		
Measuring range of vibration	[g]	-80...80; (-50...50 g when connected to a VSE)
Frequency range	[Hz]	1.5...16000
Measuring principle		piezoelectric
Communication interface		IEPE
Application		
Design		for connection to external diagnostic electronics VSE
Electrical data		
Bias voltage DC	[V]	10...12
Current consumption	[mA]	0.5...8
Min. insulation resistance	[MΩ]	100; (500 V DC)
Reverse polarity protection		yes
Measuring/setting range		
Measuring range of vibration	[g]	-80...80; (-50...50 g when connected to a VSE)
Frequency range	[Hz]	1.5...16000
Measuring principle		piezoelectric
Noise density	[mg]	0.1
Max. transverse sensitivity	[%]	5
Minimum measuring time	[s]	1
Number of measurement axes		1
Accuracy / deviations		
Accuracy		± 10 %
Measuring sensitivity		100 mV/g

VSP003

Accelerometer

VIBRATION SENSOR

Interfaces			
Communication interface		IEPE	
Operating conditions			
Ambient temperature	[°C]	-55...130	
Storage temperature	[°C]	-55...130	
Protection		IP 67	
Tests / approvals			
EMC		EN 61326-1	: 2013
Shock resistance		EN 61326-1	: 2013
MTTF	[years]	1142	
Mechanical data			
Weight	[g]	135	
Type of mounting		M8 x 1,25	
Materials		housing: stainless steel	
Tightening torque	[Nm]	8	
Remarks			
Pack quantity		1 pcs.	

Electrical connection

Connector: 1 x M12; coding: A; Contacts: 4



1	not used
2	IEPE +
3	not used
4	IEPE -