RMB310

Absolute multiturn encoder with solid shaft

MULTITURN ENCODER WETLINE

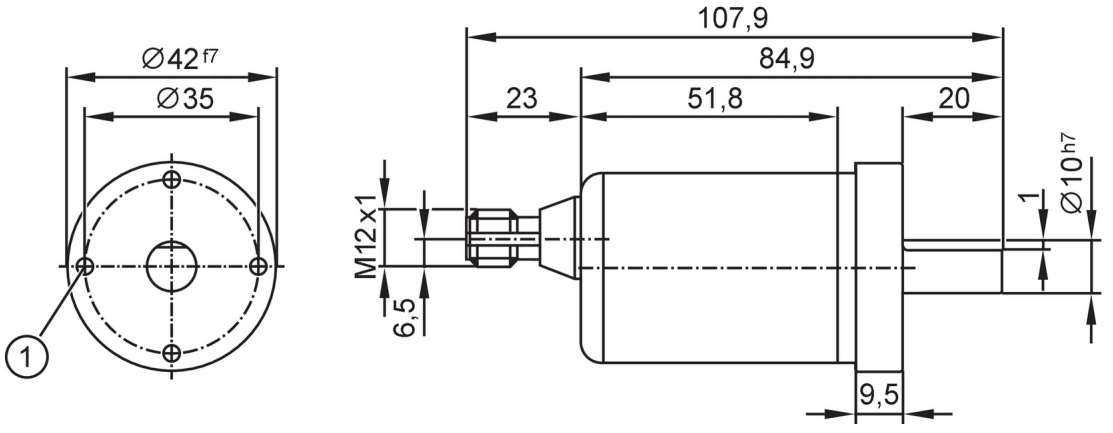

1 M4 Depth 8 mm

Product characteristics		
Resolution		65536 steps; 32768 revolutions; 31 bit
Communication interface		IO-Link
Shaft design		solid shaft
Shaft diameter	[mm]	10
Application		
Function principle		absolute
Revolution type		multiturn
Detection system		magnetic
Electrical data		
Operating voltage	[V]	18...30 DC; (; to PELV)
Rated insulation voltage	[V]	30
Current consumption	[mA]	< 75
Protection class		III
Reverse polarity protection		yes
Max. power-on delay time	[ms]	1000
Max. revolution electrical	[U/min]	6000
Outputs		
Short-circuit protection		yes
Measuring/setting range		
Resolution		65536 steps; 32768 revolutions; 31 bit
Accuracy / deviations		
Accuracy	[°]	0.1
Software / programming		
Parameter setting options		preset; zero point; direction of rotation; rotational speed
Interfaces		
Communication interface		IO-Link
Transmission type		COM3 (230,4 kBaud)
IO-Link revision		1.1

RMB310

Absolute multiturn encoder with solid shaft

MULTITURN ENCODER WETLINE

SDCI standard		IEC 61131-9 CDV	
Profiles		Common - I&D	Identification and Diagnosis
		Function	Multiple switching signal
		Function	Measurement data, high resolution
SIO mode		no	
Required master port type		A	
Min. process cycle time	[ms]	2.3	
IO-Link process data (cyclical)		**function**	**bit length**
		process value	96
		device status	4
		binary switching information	5
IO-Link functions (acyclical)		application specific tag; operating hours counter; internal temperature; switching cycles counter	
Supported DeviceIDs		**Type of operation**	**DeviceID**
		default	1064
Note		For further information please see the IODD PDF file under "Downloads"	
Operating conditions			
Ambient temperature	[°C]	-40...85	
Storage temperature	[°C]	-40...85	
Max. relative air humidity	[%]	98; (condensation not permissible)	
Protection		IP 68; IP 69K	
Tests / approvals			
EMC		DIN EN 61000-4-2 ESD	4 kV CD
		DIN EN 61000-4-3 HF radiated	10 V/m
		DIN EN 61000-4-4 Burst	2 kV
		DIN EN 61000-4-6 HF conducted	10 V
Vibration resistance		DIN EN 60068-2-6	30 g / 10...1000 Hz half-sine
Shock resistance		DIN EN 60068-2-27	200 g / 11 ms
Continuous shock resistance		DIN EN 60068-2-29	30 g / 6 ms half-sine
MTTF	[years]	283	
UL approval		voltage supply	Class 2
Mechanical data			
Weight	[g]	472.1	
Housing		cylindrical	
Dimensions	[mm]	Ø 42 / L = 107.9	
Materials		flange: stainless steel (316L/1.4404); housing: stainless steel (316L/1.4404)	
Max. starting torque	[Nm]	0.05	
Reference temperature torque	[°C]	20	
Shaft design		solid shaft	
Shaft diameter	[mm]	10	
Shaft material		stainless steel (440B/1.4112)	
Max. shaft load axial (at the shaft end)	[N]	300	
Max. shaft load radial (at the shaft end)	[N]	300	
Fixing flange		synchro-flange	

RMB310

Absolute multiturn encoder with solid shaft

MULTITURN ENCODER WETLINE

Remarks

Pack quantity	1 pcs.

Electrical connection - plug

Connector: 1 x M12, axial; coding: A; Contacts: 5; Moulded body: stainless steel (316 / 1.4401)

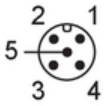

1	UB
2	SSC1.2 / IN
3	GND
4	IO-Link
5	n. c.