VSE903

Diagnostic electronics for vibration sensors

DIAGNOSTIC ELECTRONICS

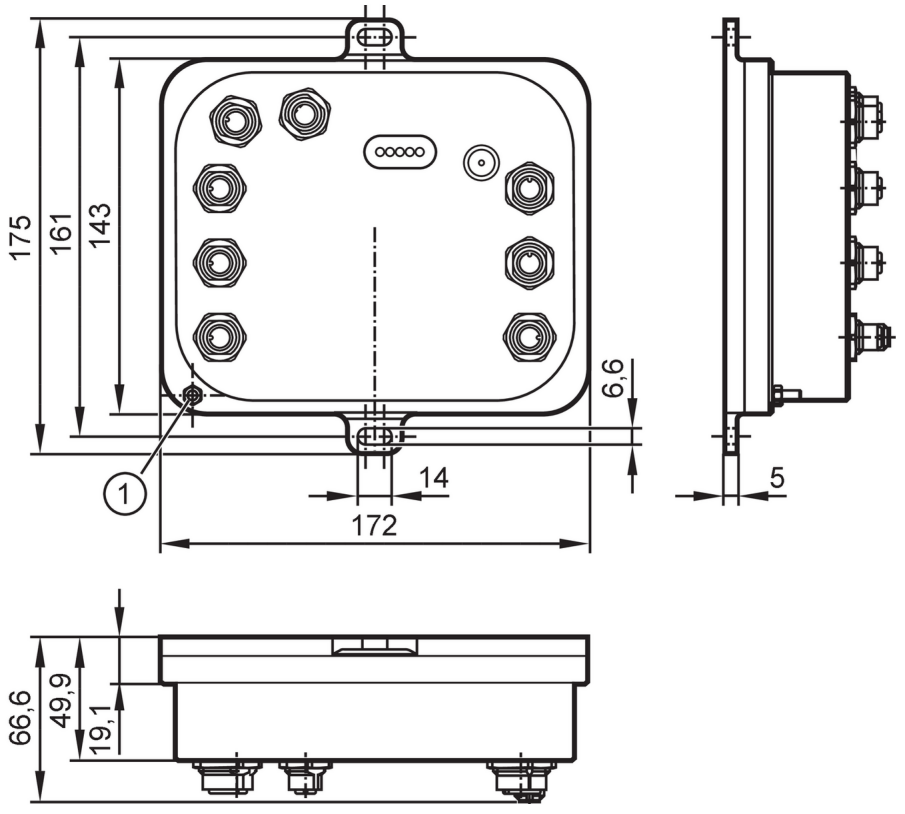

1 GND

Product characteristics		
Communication interface		Ethernet
Application		
Design		parameter setting via PC software VES004
Application		continuous vibration monitoring
Electrical data		
Operating voltage tolerance	[%]	20
Operating voltage	[V]	24 DC; (when using the IEPE input: 24 V + 20% IEPE = Integrated Electronics Piezo Electric)
Current consumption	[mA]	200; ((24 V DC))
Protection class		III
Inputs / outputs		
Total number of inputs and outputs		8; (parameterisable)
Inputs		
Total number of inputs		6
Dynamic inputs		
Number		4
Connection		S1...S4

VSE903

Diagnostic electronics for vibration sensors

DIAGNOSTIC ELECTRONICS

Analogue input		function type	Current, dynamic
		input range	0...10 mA / IEPE / 4...20 mA
		input frequency [Hz]	0,1...12000
		Resolution	16 bit
		sampling rate	100 kSamples
Process value inputs, analogue / digital			
Number		2	
Connection		IN1 (pulse), IN2 (Current)	
Digital input		function type	pulse
		Circuit	HTL
		frequency [Hz]	0,1...100000
Analogue input		function type	Current
		input range [mA]	4...20
		Resolution	12 bit
Outputs			
Max. load	[Ω]	500	
Short-circuit protection		yes	
Type of short-circuit protection		pulsed	
Overload protection		yes	
Multi-function outputs, analogue / digital			
Number		1	
Connection		OU1/Supply	
Digital output		Electrical design	PNP
		Output function	normally open / normally closed (configurable)
Analogue output		function type	Current
		output range [mA]	4...20
Digital outputs			
Number		1	
Connection		OU2	
Digital output		Electrical design	PNP
		Output function	normally open / normally closed (configurable)
Interfaces			
Communication interface		Ethernet	
Number of Ethernet interfaces		1	
Ethernet Config			
Transmission standard		10Base-T; 100Base-TX	
Transmission rate		10/100 MBit/s	
Connector type		M12	
Protocol		TCP/IP	
Factory settings		IP address: 192.168.0.1	
Operating conditions			
Ambient temperature	[°C]	0...60	
Storage temperature	[°C]	0...60	

VSE903

Diagnostic electronics for vibration sensors

DIAGNOSTIC ELECTRONICS

Protection	IP 67	
Tests / approvals		
EMC	EN 61000-4-2 ESD	4 kV contact discharge / 15 kV air discharge
	EN 61000-4-3	10 V/m (80...2700 MHz)
	EN 61000-4-4 Burst	4 kV capacitive coupling probe, earthed
	EN 61000-4-6	10 V 0,15...80 MHz
	EN 61000-6-4	industrial environments
MTTF [years]	92	
Mechanical data		
Weight [g]	1296.7	
Housing	rectangular	
Dimensions [mm]	175 x 172 x 66.6	
Materials	housing: aluminium alloy black anodised EN AW-5083	
Data memories		
History memory	yes	
Data memory buffered	yes	
Data memory type	ring memory; FIFO	
Real-time clock	yes	
Memory location	internal	
Memory interval	min. 1 min	
Memory size	881664 data records	
Accessories		
Accessories (optional)	cross-over Ethernet patch cable for the direct connection to the PC	
Remarks		
Pack quantity	1 pcs.	
Electrical connection		
Connection		

Electrical connection - Sensor 1...4

Connector: 4 x M12; coding: A; Contacts: 4

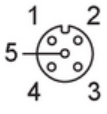

1 L+
2 Signal
3 GND
4 Test

VSE903

Diagnostic electronics for vibration sensors

DIAGNOSTIC ELECTRONICS

Electrical connection - Config / IE1 / IE2

Connector: 3 x M12; coding: D; Contacts: 4



1 TxD+
2 RxD+
3 TxD-
4 RxD-

Electrical connection - IN 1

Connector: 1 x M12; coding: A; Contacts: 3; Maximum cable length: 30 m

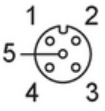

1 24 V DC
2 -
3 GND
4 IN 1 (pulses)

Electrical connection - IN 2

Connector: 1 x M12; coding: A; Contacts: 3; Maximum cable length: 30 m

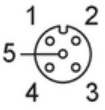

1 24 V DC
2 IN 2 (4..20mA)
3 GND
4 -

Electrical connection - OU / Supply

Connector: 1 x M12; coding: A; Contacts: 4



1 24 V DC
2 analogue / digital
3 GND
4 OU2: switch