# O2D550

## Object recognition sensor

O2DIRDKG/E1/E4/EF/GM/S/16/5A

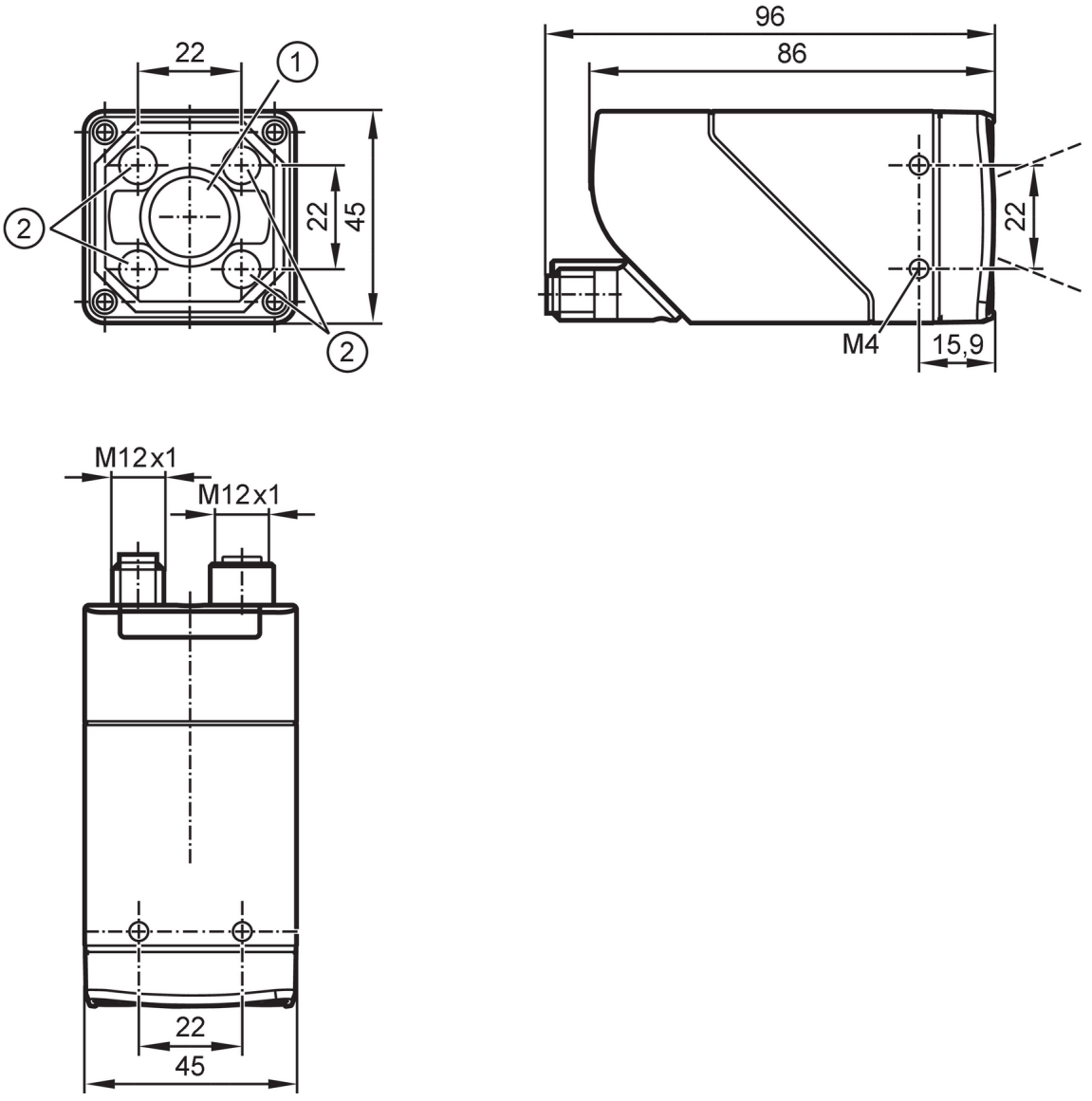


1 lens
2 Illumination unit

| | | |
|---|---|---|
| **Product characteristics** | | |
| Type of light | | infrared light |
| Image resolution | [px] | 1280 x 960 |
| Max. reading rate | [Hz] | 40 |
| **Electrical data** | | |
| Operating voltage | [V] | 18...30 DC |
| Current consumption | [mA] | < 300;  (24V DC typical) |
| Max. current consumption | [mA] | 650;  (18V DC, with switched outputs, memory stick active) |
| Protection class | | III |
| Reverse polarity protection | | yes |
| Overvoltage category | | II |
| Type of light | | infrared light |

# O2D550

## Object recognition sensor

O2DIRDKG/E1/E4/EF/GM/S/16/5A

| | | |
|---|---|---|
| Wave length | [nm] | 850 |
| Image sensor | | CMOS image sensor black/white |
| **Inputs / outputs** | | |
| Number of inputs and outputs | | Number of digital outputs: 2 |
| **Inputs** | | |
| Trigger | | external; 24 V PNP/NPN (IEC 61131-2 Typ 3); TCP/IP; PROFINET; internal |
| **Outputs** | | |
| Electrical design | | PNP/NPN;  (parameterisable) |
| Number of digital outputs | | 2;  (configurable) |
| Output function | | configurable |
| Max. voltage drop switching output DC | [V] | 1 |
| Max. current load per output | [mA] | 100 |
| Short-circuit protection | | yes |
| Type of short-circuit protection | | pulsed |
| Overload protection | | yes |
| **Detection zone** | | |
| Field of view size | [mm] | Operating distance: field of view<br>85: 28 x 21<br>300: 92 x 69<br>500: 152 x 114<br>1000: 302 x 227<br>1500: 453 x 340<br>2000: 603 x 452<br>2500: 753 x 564 |
| Operating distance | [mm] | > 85 |
| Image resolution | [px] | 1280 x 960 |
| Lens type | | standard |
| Bewegungsgeschwindigkeit | [m/s] | 7 |
| Max. reading rate | [Hz] | 40 |
| **Software / programming** | | |
| Parameter setting options | | via PC with ifm Vision Assistant |
| **Interfaces** | | |
| Communication interface | | Ethernet |
| Ethernet | | |
| Number of Ethernet interfaces | | 1 |
| Transmission standard | | 10Base-T; 100Base-TX |
| Transmission rate | | 10 MBit/s; 100 MBit/s |
| Protocol | | TCP/IP; PROFINET |
| Factory settings | | IP address: 192.168.0.69<br>subnet mask: 255.255.255.0 (Class C)<br>gateway IP address: 192.168.0.201<br>MAC address: see type label |

# O2D550

## Object recognition sensor

O2DIRDKG/E1/E4/EF/GM/S/16/5A

| | | | |
|---|---|---|---|
| Usage type | | parameter setting; data transmission | |
| **Operating conditions** | | | |
| Ambient temperature | [°C] | -10...50 | |
| Storage temperature | [°C] | -40...70 | |
| Max. relative air humidity | [%] | 90; (non condensing) | |
| Max. height above sea level | [m] | 4000 | |
| Protection | | IP 65 | |
| Pollution degree | | 3 | |
| **Tests / approvals** | | | |
| EMC | | EN IEC 61000-6-4 radiation of interference | industrial environments |
| | | EN IEC 61000-6-2 immunity | industrial environments |
| Shock resistance | | EN 60068-2-27 | 50 g 11 ms / not repetitive |
| | | EN 60068-2-27 | 40 g 6 ms / repetitive |
| Vibration resistance | | EN 60068-2-6 | 2 g (10 ... 150 Hz) |
| Photobiological safety | | exempt group; (EN 62471) | |
| Electrical safety | | EN IEC 61010-2-201 | electrical supply only via PELV circuits |
| MTTF | [years] | 53 | |
| UL approval | | Ta | -10...50 °C |
| | | Enclosure type | 1 |
| | | voltage supply | Limited Energy |
| | | File number UL | E364788 |
| **Mechanical data** | | | |
| Weight | [g] | 623.9 | |
| Type of mounting | | screw mounting; (bore hole M4 x 7mm) | |
| Dimensions | [mm] | 45 x 45 x 86 | |
| Materials | | housing: diecast zinc powder-coated; front pane: gorilla glass; LED window: PC; pushbutton: POM | |
| Sealing material | | FKM | |
| Tightening torque | [Nm] | 2.1 | |
| **Displays / operating elements** | | | |
| Display | | function | 2 x LED, green |
| | | function | 2 x LED, yellow |
| | | Multi-function button | 2 x LED, green/yellow |
| Operating elements | | 1 | Multi-function button |
| **Accessories** | | | |
| Accessories (optional) | | Mounting accessories | |
| | | Protective panes | |
| **Remarks** | | | |
| Pack quantity | | 1 pcs. | |

# O2D550

## Object recognition sensor

**O2DIRDKG/E1/E4/EF/GM/S/16/5A**

### Electrical connection - Ethernet

Connector: 1 x M12; coding: D; Contacts: 4; Moulded body: stainless steel; Sealing: FKM

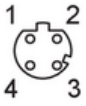


| | |
|---|---|
| 1 | TxD+ |
| 2 | RxD+ |
| 3 | TxD- |
| 4 | RxD- |

### Electrical connection - supply

Connector: 1 x M12; coding: A; Contacts: 5; Moulded body: stainless steel

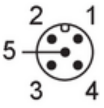


| | |
|---|---|
| 1 | U+ |
| 2 | trigger input |
| 3 | 0 V |
| 4 | switching output 1 configurable |
| 5 | switching output 2 configurable / trigger output with external illumination |