VMB301

Condition monitoring sensor with CANopen

VIBRATION SENSOR

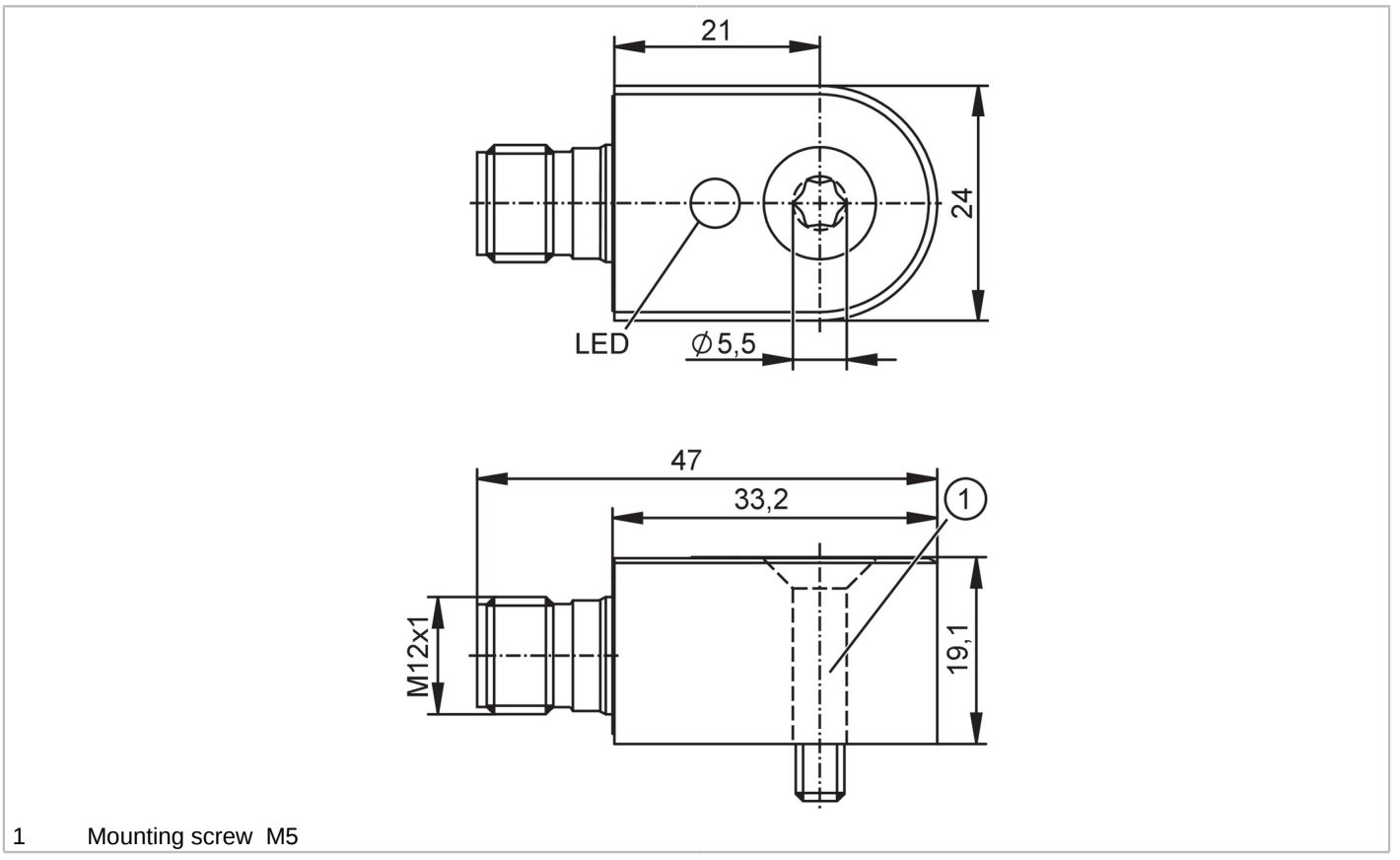

1 Mounting screw M5

Product characteristics		
Frequency range	[Hz]	1...7500
Measuring principle		capacitive
v-RMS (x-y-z)		
Measuring range of vibration	[mm/s]	0...320
Unbalance analysis		
Measuring range of vibration	[mm/s]	0...320
a-Peak/a-RMS (x-y-z)		
Measuring range of vibration	[g]	0...60
Rolling bearing analysis (BearingScout™)		
Measuring range of vibration	[g]	0...60
Application		
Application		machines and equipment in mobile applications
Electrical data		
Operating voltage	[V]	8...32 DC
Current consumption	[mA]	< 50
Min. insulation resistance	[MΩ]	100; (500 V DC)
Protection class		III
Reverse polarity protection		yes
Sensor type		microelectromechanical system (MEMS)

VMB301

Condition monitoring sensor with CANopen

VIBRATION SENSOR

Measuring/setting range		
Frequency range	[Hz]	1...7500
Measuring principle		capacitive
Number of measurement axes		3
d-Peak2Peak		
Measuring range of vibration	[mm]	0...320
Resolution	[mm]	0.1
v-RMS (x-y-z)		
Measuring range of vibration	[mm/s]	0...320
Resolution	[mm/s]	0.1
Unbalance analysis		
Measuring range of vibration	[mm/s]	0...320
Resolution	[mm/s]	0.1
a-Peak/a-RMS (x-y-z)		
Measuring range of vibration	[g]	0...60
Resolution	[g]	0.00102
Crest (x-y-z)		
Measuring range of vibration		0...50
Resolution		0.1
Rolling bearing analysis (BearingScout™)		
Measuring range of vibration	[g]	0...60
Resolution	[g]	0.00102
Temperature measurement		
Measuring range	[°C]	-30...80
Resolution	[°C]	0.1
Accuracy / deviations		
Accuracy	[K]	± 5
Linearity deviation		2; (% of the final value)
x-axis		
Accuracy		1-6000Hz +/- 10%, 6000...7500Hz -3dB
y-axis		
Accuracy		1-6000Hz +/- 10%, 6000...7500Hz -3dB
z-axis		
Accuracy		1-6000Hz +/- 10%, 6000...7500Hz -3dB
Software / programming		
Parameter setting options		CANopen
Interfaces		
Communication interface		CAN
Transmission standard		CAN interface 2.0 A/B (ISO 11898)
Protocol		CANopen
Profile		CiA 301; CiA 302; CiA 303; CiA 306; CiA 404

VMB301

Condition monitoring sensor with CANopen

VIBRATION SENSOR

Terminating resistor		yes; (120 Ω configurable; Factory setting: OFF)	
Konfigurierbare Baudrate			
Transmission rate		20; 50; 125; 250; 500; 800; 1000 [kBit/s]; factory setting 250 [kBit/s]	
Node-ID			
Note on interfaces		1...127	
		Factory setting 42	
Operating conditions			
Ambient temperature	[°C]	-40...80	
Storage temperature	[°C]	-40...80	
Protection		IP 6K7; IP 6K8; IP 6K9K; (to ISO 20653)	
Tests / approvals			
EMC		2014 / 30 / EU	
		EN IEC 61000-6-2	immunity / industrial environments
		EN IEC 61000-6-4	noise emission
Shock resistance		DIN EN 60068-2-27	50 g 11 ms
			500 g 1 ms
Vibration resistance		DIN EN 60068-2-6	20 g / 10...3000 Hz
MTTF	[years]	403	
UL approval		Ta	80 °C
		Enclosure type	1
		voltage supply	Limited Voltage/Current
		UL approval no.	L007
		File number UL	E251902
Standard		mechanical vibration; ISO 10816-3; ISO 2954; ISO 20816-3	
Mechanical data			
Weight	[g]	97	
Type of mounting		screw mounting	
Materials		housing: stainless steel (316L/1.4404)	
Tightening torque	[Nm]	4.6	
Displays / operating elements			
Display		Preoperational Mode	1 LED, green
		Operational Mode	1 LED, green flashing
		fault	1 LED, red
Accessories			
Items supplied		mounting screw: 1 x (M5 x 25 mm)	
Remarks			
Pack quantity		1 pcs.	

VMB301

Condition monitoring sensor with CANopen

VIBRATION SENSOR

Electrical connection

Connector: 1 x M12; coding: A; Contacts: 5

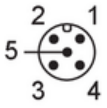

1	Screen
2	L+
3	L-
4	DATA CAN_H
5	DATA CAN_L

Other data

Parameter setting options

signal filter	v-RMS, a-RMS, a-Peak, Crest
diagnostic functions	MEMS-self-test; Heartbeat function-function; status LED
selection of possible units	v-RMS, unbalance analysis [mm/s, in/s, m/s]
	a-Peak, a-RMS, BearingScout™ [g, m/s²]
	temperature [°C, °F]
	d-Peak2Peak [m, mm, in]
additional functions	access to raw acceleration data, machine utilisation / load spectrum counter
Note	for further information please refer to the EDS description available under "Downloads"

VMB301

Condition monitoring sensor with CANopen

VIBRATION SENSOR

Diagrams and graphs

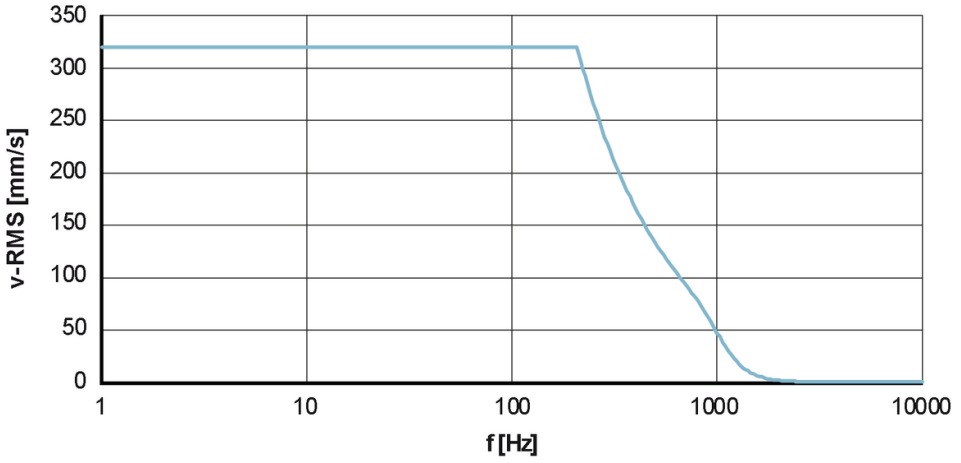

v-RMS [mm/s] vibration velocity

f [Hz] frequency