VSA007

Accelerometer

VIBRATION SENSOR

phase-out article
Discontinuation date: 03/31/2026

Alternative articles: VSA001
When selecting an alternative article and accessories please note that technical data may differ!

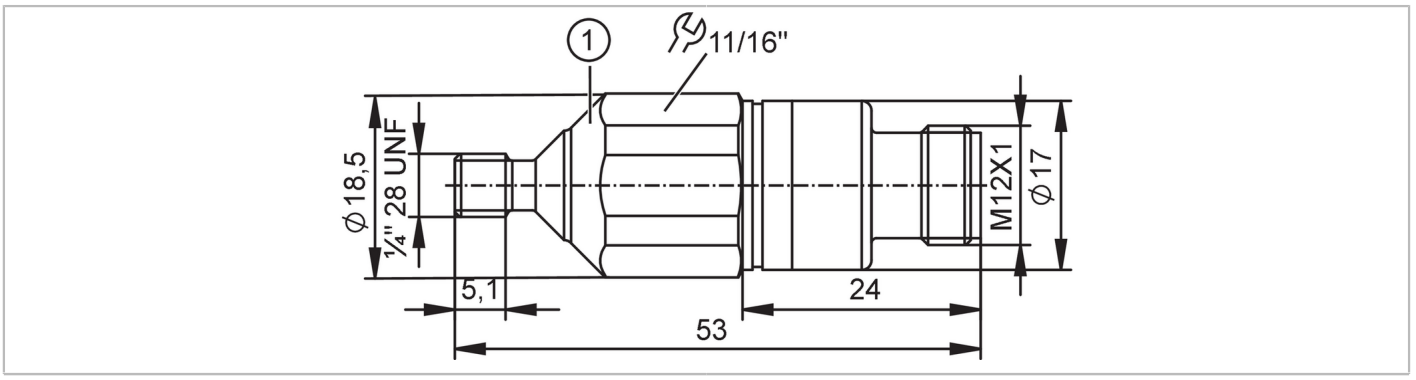

Product characteristics		
Measuring range of vibration	[g]	-25...25
Frequency range	[Hz]	1...6000
Measuring principle		capacitive
Application		
Design		for connection to external diagnostic electronics VSE
Application		vibration detection
Electrical data		
Operating voltage	[V]	7.2...10.8 DC
Current consumption	[mA]	< 15
Min. insulation resistance	[MΩ]	100; (500 V DC)
Protection class		III
Reverse polarity protection		yes
Sensor type		microelectromechanical system (MEMS)
Outputs		
Analogue current output	[mA]	0...10
Max. load	[Ω]	300
Measuring/setting range		
Measuring range of vibration	[g]	-25...25
Frequency range	[Hz]	1...6000
Measuring principle		capacitive
Sensitivity	[µA/g]	142
Number of measurement axes		1
Accuracy / deviations		
Linearity deviation		0,2 %

VSA007

Accelerometer

VIBRATION SENSOR

Operating conditions		
Ambient temperature [°C]	-30...125	
Note on ambient temperature	cULus: < 85 °C	
Storage temperature [°C]	-30...125	
Protection	IP 67; IP 68; IP 69K	

Tests / approvals		
EMC	EN 61000-6-2	
	EN 61000-6-3	
Shock resistance	DIN EN 60068-2-27	50 g 11 ms
		500 g 1 ms
Vibration resistance	DIN EN 60068-2-6	20 g / 10 ... 2000 Hz
UL approval	Ta	< 85 °C
	Enclosure type	Type 1
	voltage supply	Limited Voltage/Current
	File number UL	E251902

Mechanical data	
Weight [g]	49.9
Type of mounting	1/4"-28 UNF
Materials	housing: stainless steel (316L/1.4404)
Tightening torque [Nm]	8
Mechanische Überlastfestigkeit [g]	500

Accessories	
Items supplied	washer, conical

Remarks	
Pack quantity	1 pcs.

Electrical connection

Connector: 1 x M12; coding: A; Contacts: 4; Maximum cable length: 250 m

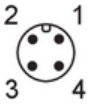

1	L+ (+9 V)
2	I out
3	GND
4	Test