LDH110

Oil humidity sensor

OIL HUMIDITY SENSOR ANALOG

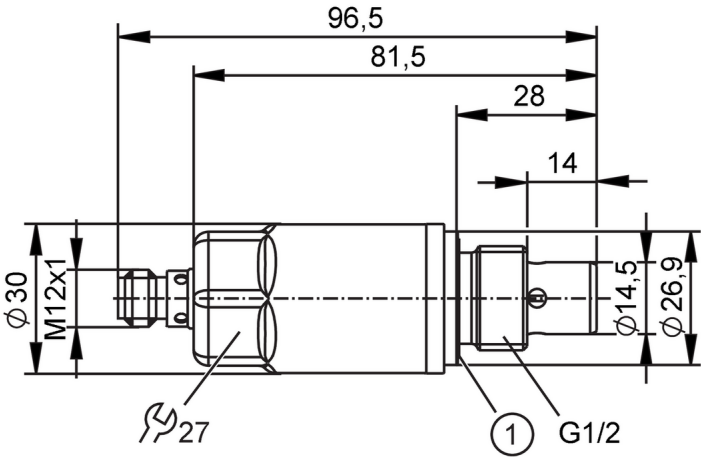

1 Sealing

Product characteristics			
Number of inputs and outputs		Number of analogue outputs: 2	
Process connection		threaded connection G 1/2	
Application			
Special feature		Gold-plated contacts	
Media		mineral oils; synthetic esters; biodegradable oils	
Cannot be used for		See operating instructions, chapter "Intended use".	
Medium temperature	[°C]	-40...120	
Pressure rating		50 bar	5 MPa
Vacuum resistance	[mbar]	-1000	
MAWP for applications according to CRN	[MPa]	5	
Electrical data			
Operating voltage	[V]	9...33 DC	
Current consumption	[mA]	< 50	
Protection class		III	
Reverse polarity protection		yes	
Power-on delay time	[s]	2	
Max. current load total	[A]	0.085	
Inputs / outputs			
Number of inputs and outputs		Number of analogue outputs: 2	
Outputs			
Total number of outputs		2	
Output signal		analogue signal	
Output function		analogue output humidity / temperature	
Number of analogue outputs		2	
Analogue current output	[mA]	4...20	
Max. load	[Ω]	(UB - 5V) * 50	

LDH110

Oil humidity sensor

OIL HUMIDITY SENSOR ANALOG

Measuring/setting range			
Measuring range	[% RH]	0...100	
Temperature measurement			
Measuring range	[°C]	-40...120	
Accuracy / deviations			
Accuracy		± 3%; (± 5 % in the range < 10 %, > 90 %)	
Repeatability		± 0,5 %	
Resolution	[%]	12 Bit	
Temperature measurement			
Accuracy	[K]	± 1	
Repeatability	[K]	± 0,5	
Resolution	[%]	12 Bit process value	
Response times			
Response time	[s]	oil: T09 < 30	
Temperature measurement			
Response time	[s]	oil: T09 < 30	
Operating conditions			
Ambient temperature	[°C]	-40...85	
Storage temperature	[°C]	-40...85	
Max. relative air humidity	[%]	100	
Protection		IP 68; IP 69K; (7 days / 3 m water depth / 0.3 bar: IP 68)	
Tests / approvals			
EMC		DIN EN 61000-6-2	
		DIN EN 61000-6-4	
Shock resistance		DIN EN 60068-2-27	50 g (11 ms)
Vibration resistance		DIN EN 60068-2-6	20 g (10...2000 Hz)
MTTF	[years]	284	
UL approval		File number UL	E364788
Pressure Equipment Directive		Sound engineering practice; can be used for group 2 fluids; group 1 fluids on request	
Mechanical data			
Weight	[g]	118.5	
Materials		stainless steel (316L/1.4404); PEI; Sealing: FKM	
Materials (wetted parts)		stainless steel (316L/1.4404); PA6 GF50; epoxy resin; Sealing: NBR	
Process connection		threaded connection G 1/2	
Remarks			
Remarks		accuracy values expressed in percent refer to the measuring span	
Pack quantity		1 pcs.	

Electrical connection

Connector: 1 x M12 (EN 61067-2-101); coding: A; Contacts: 4, gold-plated



LDH110

Oil humidity sensor

OIL HUMIDITY SENSOR ANALOG

Connection

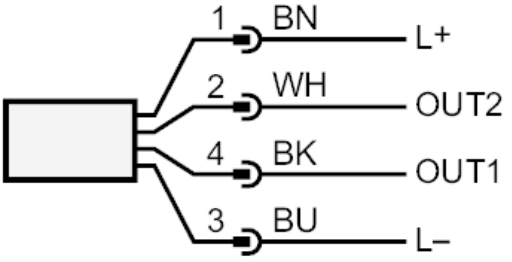

OUT1	analogue output temperature
OUT2	analogue output humidity
	colours to DIN EN 60947-5-2
BK=	black
BN=	brown
BU=	blue
WH=	white