VVB011

Vibration sensor

VIBRATION IO-LINK SWITCH

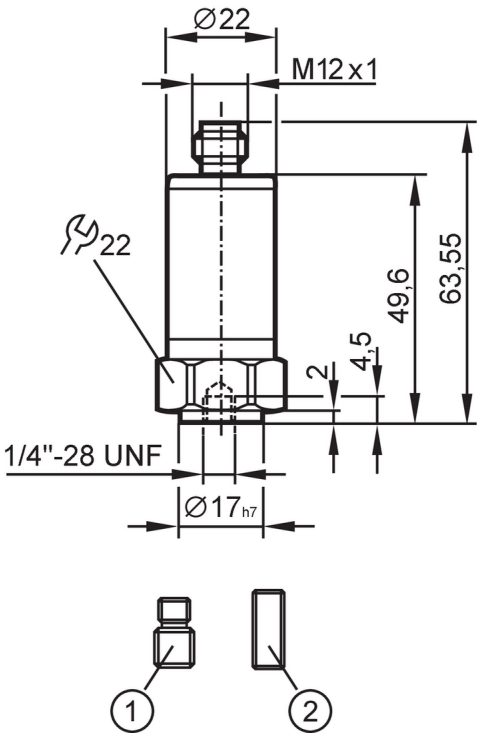

1 set screw ¼"-28 UNF / M8
2 set screw ¼"-28 UNF

Product characteristics			
Frequency range	[Hz]	2...10000	
Measuring principle		capacitive	
v-RMS			
Measuring range of vibration	[mm/s]	0...45	
a-Peak / a-RMS			
Measuring range of vibration		0...50 g	0...490.3 m/s²
Application			
Application		big machines, performance > 300 kW, speed 120...600 rpm	
Electrical data			
Operating voltage	[V]	18...30 DC	
Current consumption	[mA]	< 50	
Min. insulation resistance	[MΩ]	100; (500 V DC)	
Protection class		III	
Reverse polarity protection		yes	
Sensor type		microelectromechanical system (MEMS)	
Inputs / outputs			
Number of inputs and outputs		Number of digital outputs: 2	
Outputs			
Output signal		switching signal; IO-Link	
Electrical design		PNP/NPN; (configurable)	

VVB011

Vibration sensor

VIBRATION IO-LINK SWITCH

Number of digital outputs		2	
Output function		normally open / normally closed	
Max. voltage drop switching output DC	[V]	2	
Max. current load per output	[mA]	100	
Short-circuit protection		yes	
Type of short-circuit protection		pulsed	
Overload protection		yes	
Measuring/setting range			
Note on setpoint SP		parameterisable	
Frequency range	[Hz]	2...10000	
Measuring principle		capacitive	
Number of measurement axes		1	
v-RMS			
Measuring range of vibration	[mm/s]	0...45	
Set point SP	[mm/s]	0.2...45	
Reset point rP	[mm/s]	0...44.8	
In steps of	[mm/s]	0.2	
a-Peak / a-RMS			
Measuring range of vibration		0...50 g	0...490.3 m/s²
Set point SP		0.2...50 g	2...490.3 m/s²
Reset point rP		0...49.8 g	0...488.3 m/s²
In steps of		0.2 g	2 m/s²
Crest			
Measuring range of vibration		1...50	
Set point SP		2...50	
Reset point rP		1...49	
In steps of		1	
Temperature measurement			
Measuring range	[°C]	-30...80	
Resolution	[°C]	0.1	
Set point SP	[°C]	-28...80	
Reset point rP	[°C]	-30...78	
In steps of	[°C]	2	
Accuracy / deviations			
Accuracy		≤ 4 kHz +/-10 %; ≥ 4...10 kHz: < 3 dB	
Accuracy	[K]	± 2,5 K + (0,2 x (Umgebungstemperatur - Oberflächentemperatur))	
Linearity deviation		2 %	
Software / programming			
Parameter setting options		Software	
Diagnostic functions		self-test	

VVB011

Vibration sensor

VIBRATION IO-LINK SWITCH

Interfaces			
Communication interface		IO-Link	
IO-Link revision		1.1	
SDCI standard		IEC 61131-9: 2013-07	
Profiles		BLOB	Binary Large Object transfer
		Common - I&D	Identification and Diagnosis
		Function	Measurement data, standard resolution
SIO mode		yes	
Required master port type		A	
Process data analogue		10	
Process data binary		2	
IO-Link functions (acyclical)		filter for v-RMS, a-RMS, a-Peak; Hysteresis; window; switch points; switching logic	
Supported DeviceIDs		**Type of operation**	**DeviceID**
		Status A (COM2)	1256
		Status B (COM2 / COM3)	1371
Note		For further information please see the IODD PDF file under "Downloads"	
Status A (COM2)			
Transmission type		COM2 (38,4 kBaud)	
Min. process cycle time	[ms]	11.6	
Status B (COM2 / COM3)			
Transmission type		COM3 (230,4 kBaud)	
Min. process cycle time	[ms]	3.6	
Operating conditions			
Ambient temperature	[°C]	-30...80	
Storage temperature	[°C]	-30...80	
Protection		IP 67; IP 68; IP 69K	
Tests / approvals			
EMC		2014/30/EU	
		DIN EN 61000-6-2	
		DIN EN 61000-6-3	
Shock resistance		DIN EN 60068-2-27	50 g 11 ms
			500 g 1 ms
Vibration resistance		DIN EN 60068-2-6	20 g / 10...3000 Hz
MTTF	[years]	299	
UL approval		Ta	-30...70 °C
		UL approval no.	L002
Mechanical data			
Weight	[g]	116.5	
Housing		cylindrical	
Type of mounting		set screw	
Dimensions	[mm]	Ø 22 / L = 63.55	
Materials		housing: stainless steel (316L/1.4404)	
Tightening torque	[Nm]	8	

VVB011

Vibration sensor

VIBRATION IO-LINK SWITCH

Accessories	
Items supplied	set screw: 1 x (1/4" 28 UNF / M8)
	set screw: 1 x (1/4"28 UNF x 5/8" DIN916)

Remarks	
Pack quantity	1 pcs.

Electrical connection

Connector: 1 x M12; coding: A; Contacts: 4; Maximum cable length: 20 m



1	L+
2	OUT2
3	L-
4	OUT1 switching output or IO-Link