OVP810

Video processing unit (VPU)

OVPAA/R0/E0/E1/TX2NX/4GB

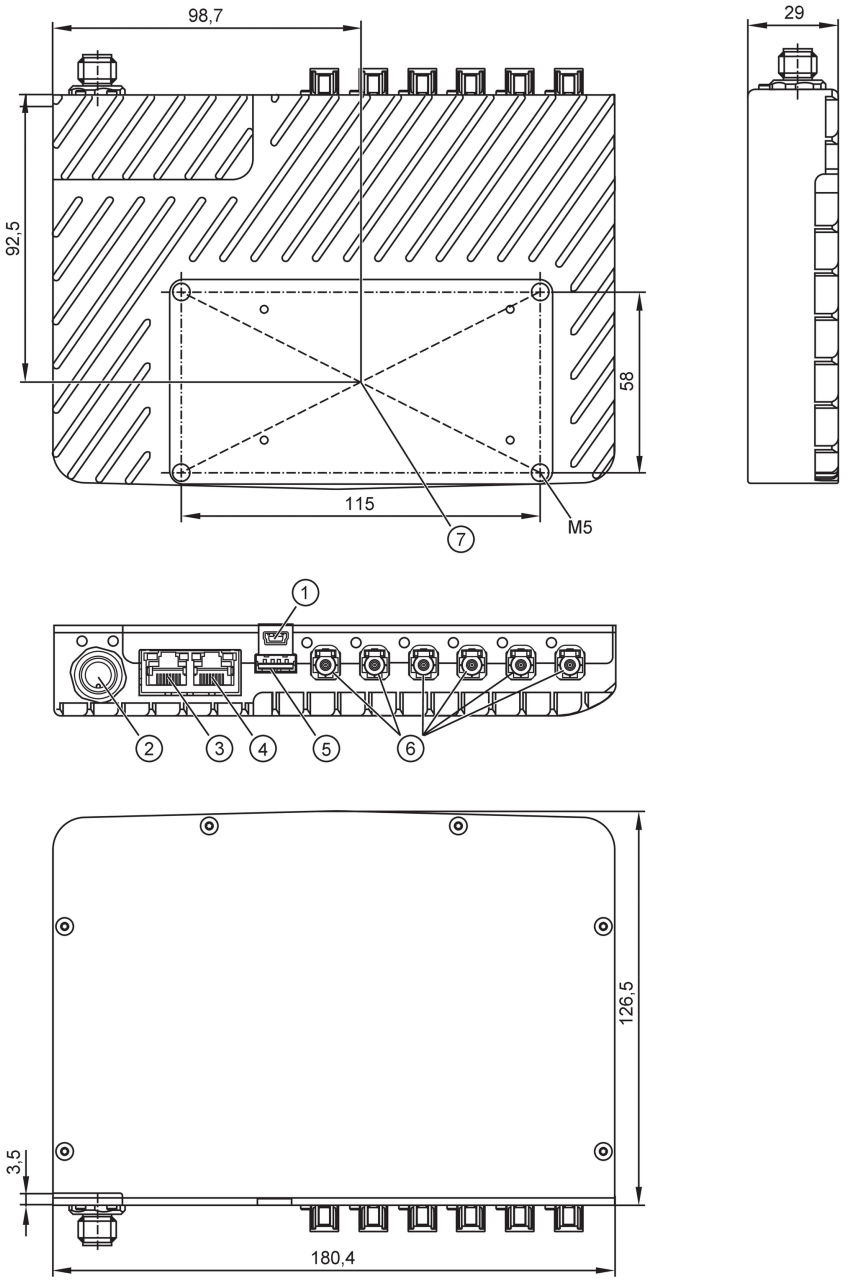

1 USB-C interface 3.2 (ifm internal interface)
2 voltage supply / CAN
3 Ethernet 0 RJ45
4 Ethernet 1 RJ45
5 USB interface 3.0
6 Connection cameras x 4 HFM
7 coordinate reference point (IMU)

Application	
Application	Vision sensors

Electrical data		
Operating voltage	[V]	19.2...28.8 DC
Max. current consumption	[mA]	710

OVP810

Video processing unit (VPU)

OVPAA/R0/E0/E1/TX2NX/4GB

Power consumption	[W]	15.4; (Base value of the VPU. Increase the current/power consumption for each sensor head according to its data sheet. With 3 O3R222 cameras, at 20fps, the maximum current consumption of the system is 2270mA, the average power consumption is 35.8W.)
Interfaces		
Number of CAN interfaces		1
Number of Ethernet interfaces		2
Number of USB interfaces		2
CAN		
Protocol		free protocol
Ethernet-ETH0		
Transmission standard		1GBase-T
Transmission rate		1000 MBit/s
Type of connector		RJ45
Protocol		TCP/IP
Factory settings		IP address: 192.168.0.69
		subnet mask: 255.255.255.0 (Class C)
		gateway IP address: 192.168.0.201
		MAC address: see type label
Ethernet-ETH1		
Transmission standard		1GBase-T
Transmission rate		1000 MBit/s
Type of connector		RJ45
Protocol		TCP/IP
Factory settings		IP address: 192.168.42.69
		subnet mask: 255.255.255.0 (Class C)
		gateway IP address: 0.0.0.0
		MAC address: see type label
Sensor interface		
Transmission standard		FPD-Link
Type of connector		HFM (Mini-FAKRA)
Note on interfaces		maximum number of cameras: see operating instructions
USB		
Type of connector		Mini-USB; type A
Version		2.0; 3.0
Operating conditions		
Ambient temperature	[°C]	-10...40
Storage temperature	[°C]	-40...85
Protection		IP 50

Tests / approvals		
EMC	EN IEC 61000-6-4	radiation of interference / industrial environments
	EN IEC 61000-6-2	noise immunity / industrial environments
Shock resistance	DIN EN 60068-2-27	50 g / (11 ms) not repetitive
	DIN EN 60068-2-27	40 g / (6 ms) repetitive

OVP810

Video processing unit (VPU)

OVPAA/R0/E0/E1/TX2NX/4GB

Vibration resistance		DIN EN 60068-2-6	2 g / (10...150 Hz)
		DIN EN 60068-2-64	2.3 g RMS / (10...500 Hz)
Electrical safety		DIN EN 61010-2-201	electrical supply only via PELV circuits
MTTF	[years]	44	

Mechanical data

Weight	[g]	1285
Dimensions	[mm]	126.5 x 29 x 180.4
Material		housing: aluminum
Tightening torque	[Nm]	< 5.5

Hardware

Processor	SOM: NVIDIA Jetson TX2NX 4GB Module CPU: Dual-Core NVIDIA Denver 2 64-Bit CPU and Quad-Core Arm® Cortex®-A57 MPCore processor; GPU: 256-core NVIDIA Pascal™ architecture GPU
Working memory	4GB 128-bit LPDDR4, 1600 MHz - 51.2 GB/s
Mass storage	32GB eMMC 5.1 Flash (16GB for docker)

Remarks

Pack quantity	1 pcs.

Electrical connection - Ethernet

Connector: RJ45; Contacts: 4

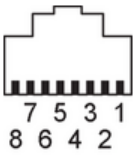

1	TX +
2	TX -
3	RX +
4	not used
5	not used
6	RX -
7	not used
8	not used

Electrical connection - USB socket

Connector: 1 x mini USB interface

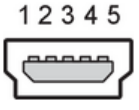

Electrical connection - USB socket Typ A

Connector: 1 x Typ A

Electrical connection - sensor interface

Connector: 6 x HFM (Mini-FAKRA) (AMK12A-1M4Z5-A)

OVP810

Video processing unit (VPU)

OVPAA/R0/E0/E1/TX2NX/4GB

Electrical connection - voltage supply / CAN

Connector: 1 x M12; coding: A; Contacts: 5

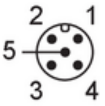

1	screen
2	24 V
3	GND
4	CAN +
5	CAN -

Other data

Connection

	Port 0	Port 1	Port 2	Port 3	Port 4	Port 5
example 1	camera 1 (3D)	camera 2 (3D)	camera 1 (2D)	camera 2 (2D)	camera 3 (3D)	camera 4 (3D)
example 2	camera 1 (2D)	camera 2 (2D)	camera 1 (3D)	camera 2 (3D)	camera 3 (2D)	camera 4 (2D)
example 3	camera 1 (3D)	camera 2 (3D)	camera 3 (3D)	camera 4 (3D)	camera 5 (3D)	camera 6 (3D)
example 4	camera 1 (3D-VGA)	camera 2 (3D-VGA)	camera 3 (3D-VGA)	camera 4 (3D-VGA)	-	-

ports 0 and 1, 2 and 3, 4 and 5 must be assigned to the same type of image sensor.

please note the different 3D image sensor types 38k and VGA when connecting the cameras.

remarks: Further information on the free memory required for specific applications can be found in the firmware-specific version information (https://ifm.3d.com/).