RM6121

Absolute multiturn encoder with hollow shaft

RM-8192-S24/S

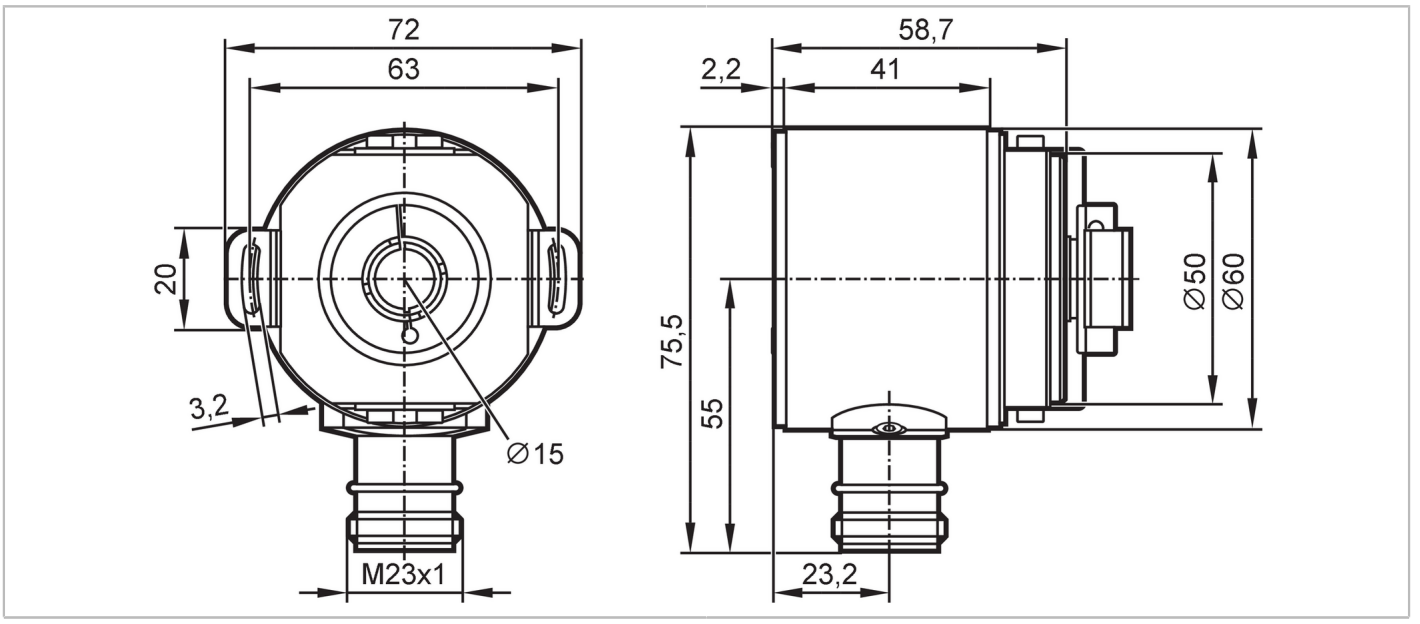

Product characteristics		
Resolution		8192 resolution; 8192 steps; 4096 revolutions; 25 bit
Communication interface		SSI data interface
Shaft design		hollow shaft open to one side
Shaft diameter	[mm]	15
Application		
Function principle		absolute
Revolution type		multiturn
Electrical data		
Operating voltage	[V]	4.5...30 DC
Reverse polarity protection		yes
Outputs		
Code		Gray code; (increasing code values when turned clockwise (seen on the shaft))
Code signal		Clock input; TTL-compatible signals; clock and clock (inv.) from drivers to RS 422; data output; synchronous serial; TTL-compatible signals, data, and data (inv.)
Measuring/setting range		
Resolution		8192 resolution; 8192 steps; 4096 revolutions; 25 bit
Interfaces		
Communication interface		SSI data interface
Operating conditions		
Ambient temperature	[°C]	-40...85
Storage temperature	[°C]	-40...85
Max. relative air humidity	[%]	98
Protection		IP 64
Tests / approvals		
Shock resistance		100 g (6 ms)

RM6121

Absolute multiturn encoder with hollow shaft

RM-8192-S24/S

Vibration resistance			20 g (10...2000 Hz)
MTTF	[years]		16
Mechanical data			
Weight	[g]		774
Housing			cylindrical
Materials			stainless steel; flange: stainless steel
Max. revolution, mechanical	[U/min]		12000
Shaft design			hollow shaft open to one side
Shaft diameter	[mm]		15
Shaft material			steel (1.4104)
Max. shaft load axial (at the shaft end)	[N]		40
Max. shaft load radial (at the shaft end)	[N]		110
Displays / operating elements			
Display		voltage supply	LED, green
		error	LED, red
Remarks			
Pack quantity			1 pcs.

Electrical connection

Connector: 1 x M23; Contacts: 12

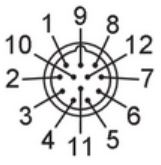

1	clock -
2	clock +
3	data +
4	data -
5	not used
6	not used
7	not used
8	direction of rotation
9	reset to zero
10	not used
11	4.5...30 V UB
12	GND

Diagrams and graphs

Pulse diagram

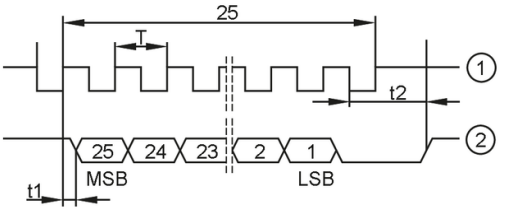

1 clock

2 data