ZB0929

Gateway for wireless vibration sensors

VIBRATION WIRELESS GATEWAY IP20

phase-out article

Discontinuation date: 11/30/2027

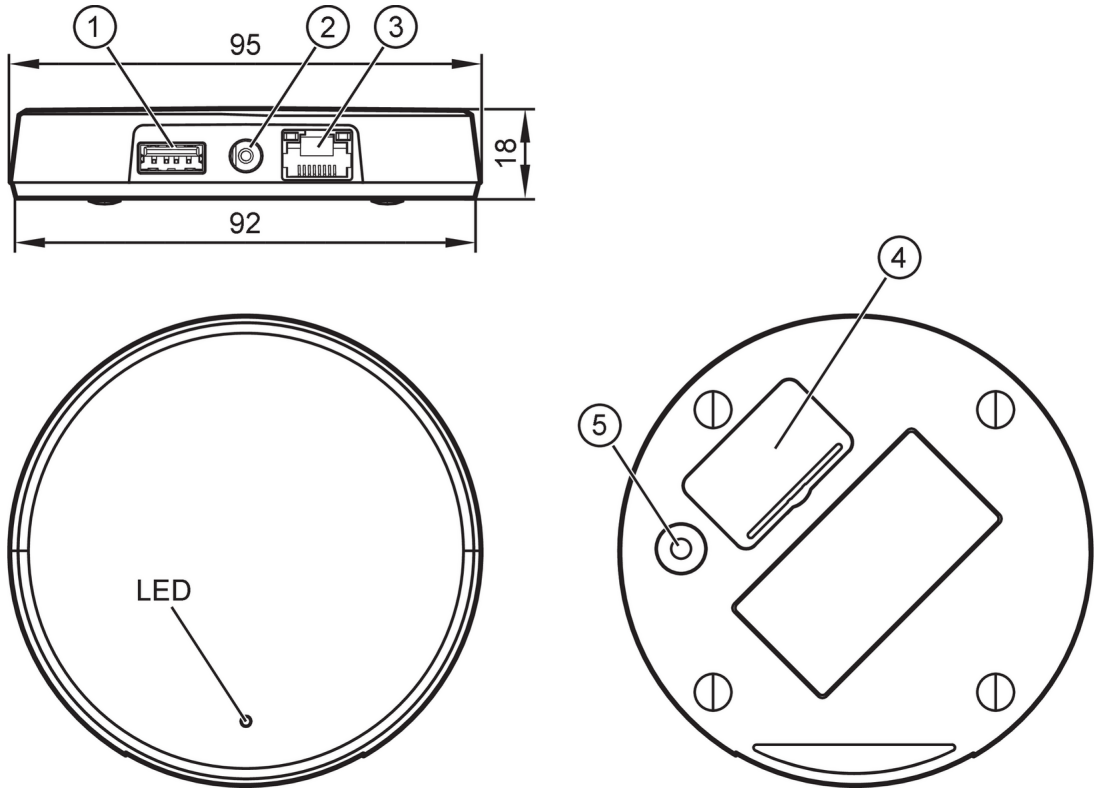

1 USB interface
2 voltage supply
3 Ethernet interface
4 slot for micro SIM card
5 configuration button

Application		
Radio approval for		USA; Canada; EU/RED; Australia; Brazil
Note on radio approval		The list of countries applying the European Radio Equipment Directive 2014/53/EU (RED) can be found under “Downloads”.
Electrical data		
Operating voltage	[V]	3.6 DC; (lithium thionyl chloride battery lithium thionyl chloride battery; battery life > 4 years; (depending on environmental conditions & settings); battery cannot be replaced)
Current consumption	[mA]	< 200
Protection class		III
Software / programming		
Parameter setting options		MQTT; ifm IoTcore
Interfaces		
Communication interface		WLAN; Mobile networks; Ethernet
Ethernet		
Connector type		RJ45
Protocol		TCP/IP
Usage type		data transmission

ZB0929

Gateway for wireless vibration sensors

VIBRATION WIRELESS GATEWAY IP20

ISM			
Frequency band		2,4 GHz	
Safety standard		AES-128	
Protocol		proprietary	
Usage type		sensor connection	
Note on interfaces		number of maximum connections of sensors: 30	
Mobile networks			
Transmission standard		2G quadband GSM; LTE Cat-M1; NarrowBand-IoT	
Usage type		data transmission	
USB			
Connector type		USB A	
Usage type		firmware update	
WLAN			
Frequency band		2,4 GHz	
Safety standard		WPA2	
Usage type		data transmission	
Operating conditions			
Ambient temperature	[°C]	0...50	
Storage temperature	[°C]	-40...85	
Protection		IP 20	
Tests / approvals			
EMC		DIN EN 301489-1	
		DIN EN 301489-17	
		DIN EN 301489-52	
Mechanical data			
Weight	[g]	423	
Dimensions	[mm]	Ø 95	
Materials		PA; ABS	
Displays / operating elements			
Display		status	1 x LED
Accessories			
Items supplied		Mounting accessories, for wall mounting	
		Power supply	
Remarks			
Remarks		no SIM card supplied	
Pack quantity		1 pcs.	