OVP813

Video processing unit (VPU)

OVPAA/RO/E0/E1/TX2NX/4GBPDSODS

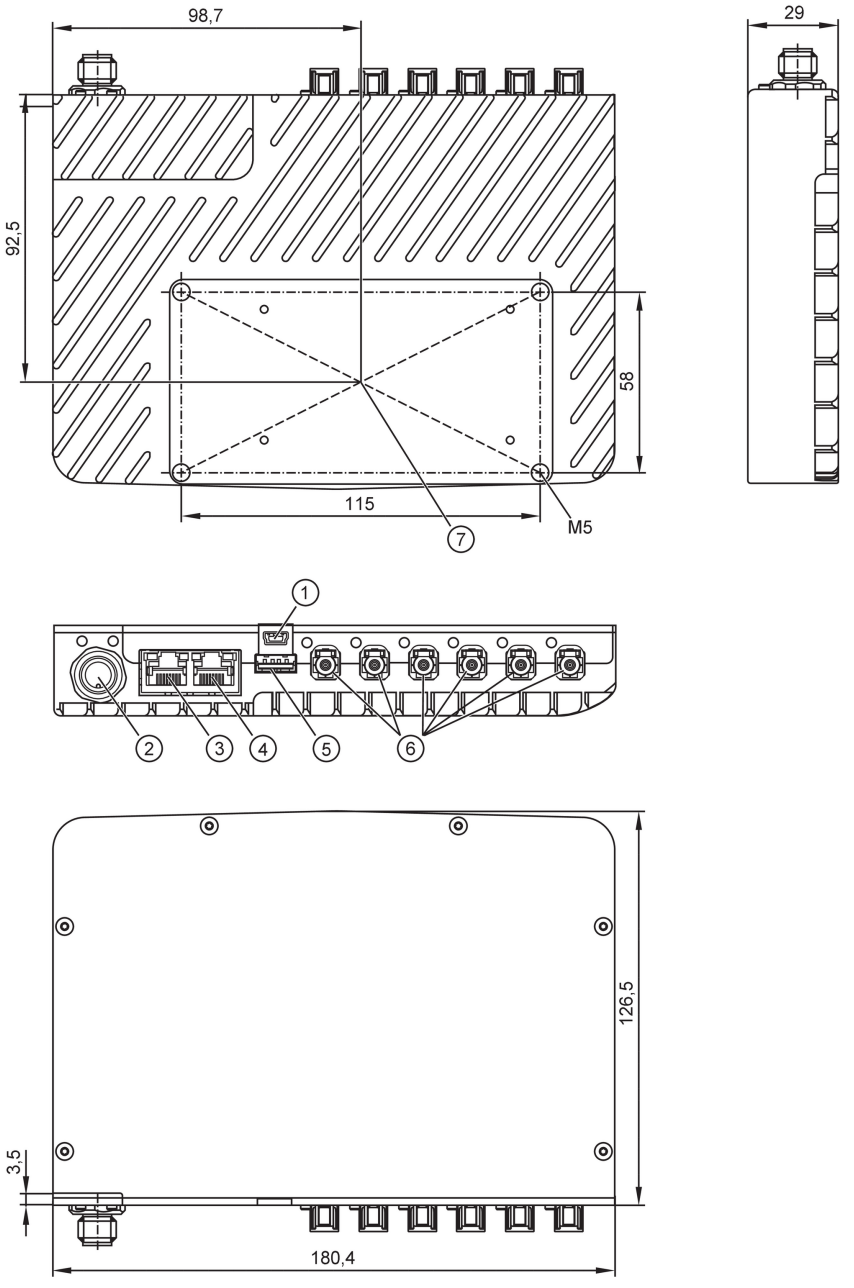

1 USB-C interface 3.2 (ifm internal interface)
2 voltage supply / CAN
3 Ethernet 0 RJ45
4 Ethernet 1 RJ45
5 USB interface 3.0
6 Connection cameras x 4 HFM
7 coordinate reference point (IMU)

Application	
Application	ODS (obstacle detection) for collision avoidance; PDS for fine positioning of pallets in source and sink.; includes pallet detection (GET PALLET), rack detection (GET RACK) and free space determination (VOL CHECK)

Electrical data		
Operating voltage	[V]	19.2...28.8 DC

OVP813

Video processing unit (VPU)

OVPAA/RO/E0/E1/TX2NX/4GBPDSODS

Max. current consumption	[mA]	710
Power consumption	[W]	15.4; (Base value of the VPU. Increase the current/power consumption for each sensor head according to its data sheet. With 3 O3R222 cameras, at 20fps, the maximum current consumption of the system is 2270mA, the average power consumption is 35.8W.)
Interfaces		
Number of CAN interfaces		1
Number of Ethernet interfaces		2
Number of USB interfaces		2
CAN		
Protocol		free protocol
Ethernet-ETH0		
Transmission standard		1GBase-T
Transmission rate		1000 MBit/s
Type of connector		RJ45
Protocol		TCP/IP
Factory settings		IP address: 192.168.0.69
		subnet mask: 255.255.255.0 (Class C)
		gateway IP address: 192.168.0.201
		MAC address: see type label
Ethernet-ETH1		
Transmission standard		1GBase-T
Transmission rate		1000 MBit/s
Type of connector		RJ45
Protocol		TCP/IP
Factory settings		IP address: 192.168.42.69
		subnet mask: 255.255.255.0 (Class C)
		gateway IP address: 0.0.0.0
		MAC address: see type label
Sensor interface		
Transmission standard		FPD-Link
Type of connector		HFM (Mini-FAKRA)
Note on interfaces		number of cameras when using the PDS function (Pick and Drop System): see operating instructions
		number of cameras when using the ODS function (obstacle detection system): see operating instructions:
USB		
Type of connector		Mini-USB; type A
Version		2.0; 3.0
Operating conditions		
Ambient temperature	[°C]	-10...40
Storage temperature	[°C]	-40...85
Protection		IP 50

OVP813

Video processing unit (VPU)

OVPAA/RO/E0/E1/TX2NX/4GBPDSODS

Tests / approvals		
EMC	EN IEC 61000-6-4	radiation of interference / industrial environments
	EN IEC 61000-6-2	noise immunity / industrial environments
Shock resistance	DIN EN 60068-2-27	50 g / (11 ms) not repetitive
	DIN EN 60068-2-27	40 g / (6 ms) repetitive
Vibration resistance	DIN EN 60068-2-6	2 g / (10...150 Hz)
	DIN EN 60068-2-64	2.3 g RMS / (10...500 Hz)
Electrical safety	DIN EN 61010-2-201	electrical supply only via PELV circuits

Mechanical data		
Weight	[g]	1288.5
Dimensions	[mm]	126.5 x 29 x 180.4
Material		housing: aluminum
Tightening torque	[Nm]	< 5.5

Hardware	
Processor	SOM: NVIDIA Jetson TX2NX 4GB Module CPU: Dual-Core NVIDIA Denver 2 64-Bit CPU and Quad-Core Arm® Cortex®-A57 MPCore processor; GPU: 256-core NVIDIA Pascal™ architecture GPU
Working memory	4GB 128-bit LPDDR4, 1600 MHz - 51.2 GB/s
Mass storage	32GB eMMC 5.1 Flash (16GB for docker)

Remarks	
Pack quantity	1 pcs.

Electrical connection - Ethernet Connection

Connector: RJ45; Contacts: 8

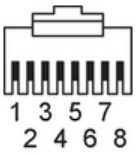

1	TX +
2	TX -
3	RX +
4	not used
5	not used
6	RX -
7	not used
8	not used

Electrical connection - USB socket Typ A

Connector: 1 x Typ A

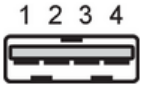

Electrical connection - mini USB interface

Connector: 1 x mini USB interface

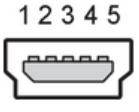

OVP813

Video processing unit (VPU)

OVPAA/RO/E0/E1/TX2NX/4GBPDSODS

Electrical connection - sensor interface

Connector: 6 x HFM (Mini-FAKRA) (AMK12A-1M4Z5-A)

Electrical connection - voltage supply / CAN

Connector: 1 x M12; coding: A; Contacts: 5

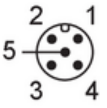

1	screen
2	24 V
3	GND
4	CAN +
5	CAN -

Other data

Connection

	Port 0	Port 1	Port 2	Port 3	Port 4	Port 5
example 1	camera 1 (3D-38k)	camera 2 (3D-38k)	camera 1 (2D)	camera 2 (2D)	camera 3 (3D-38k)	-
example 2	camera 1 (2D)	camera 2 (2D)	camera 1 (3D-38k)	camera 2 (3D-38k)	camera 3 (2D)	camera 4 (2D)
example 3	camera 1 (3D-38k)	camera 2 (3D-38k)	-	camera 4 (3D-VGA)	-	-
example 4	camera 1 (3D-VGA)	camera 2 (3D-VGA)	camera 3 (3D-VGA)	camera 4 (3D-VGA)	-	-

ports 0 and 1, 2 and 3, 4 and 5 must be assigned to the same type of image sensor.

please note the different 3D image sensor types 38k and VGA when connecting the cameras.

remarks: Further information on the free memory required for specific applications can be found in the firmware-specific version information (https://ifm.3d.com/).

typical application characteristics for PDS

Function	camera heads	Operating distance	max. repetition rate	max. angle of approach YAW	max. angle of approach ROLL
Get Pallet	O3R222 60°	≤ 4.0m	4 Hz	23°	4.6°
Get Rack	O3R222 60°	≤ 2.0m	n/a	11.5°	11.5°
Vol Check	O3R222 60°	≤ 4.0m	4 Hz	11.5°	14°

OVP813

Video processing unit (VPU)

OVPAA/RO/E0/E1/TX2NX/4GBPDSODS

typical detection range for ODS

object / object height	camera heads	mounting position	typical detection range *
fork on ground	O3R225 105°	20...30 cm	1.3 m
	O3R225 105°	55...60 cm	1.5 m
	O3R222 60°	55...60 cm	2.5 m
fork cantilevered	O3R225 105°	20...30 cm	2.1 m
	O3R225 105°	55...60 cm	2.1 m
	O3R222 60°	55...60 cm	3.0 m
7 cm cube (18%)	O3R225 105°	20...30 cm	1.6 m
	O3R225 105°	55...60 cm	1.6 m
	O3R222 60°	55...60 cm	2.5 m

* Test -conditions :

indoor

speed : ≤ 2 m/s

sealed, slightly inhomogeneous surface