# VSM104

## Accelerometer

VIBRATION SENSOR

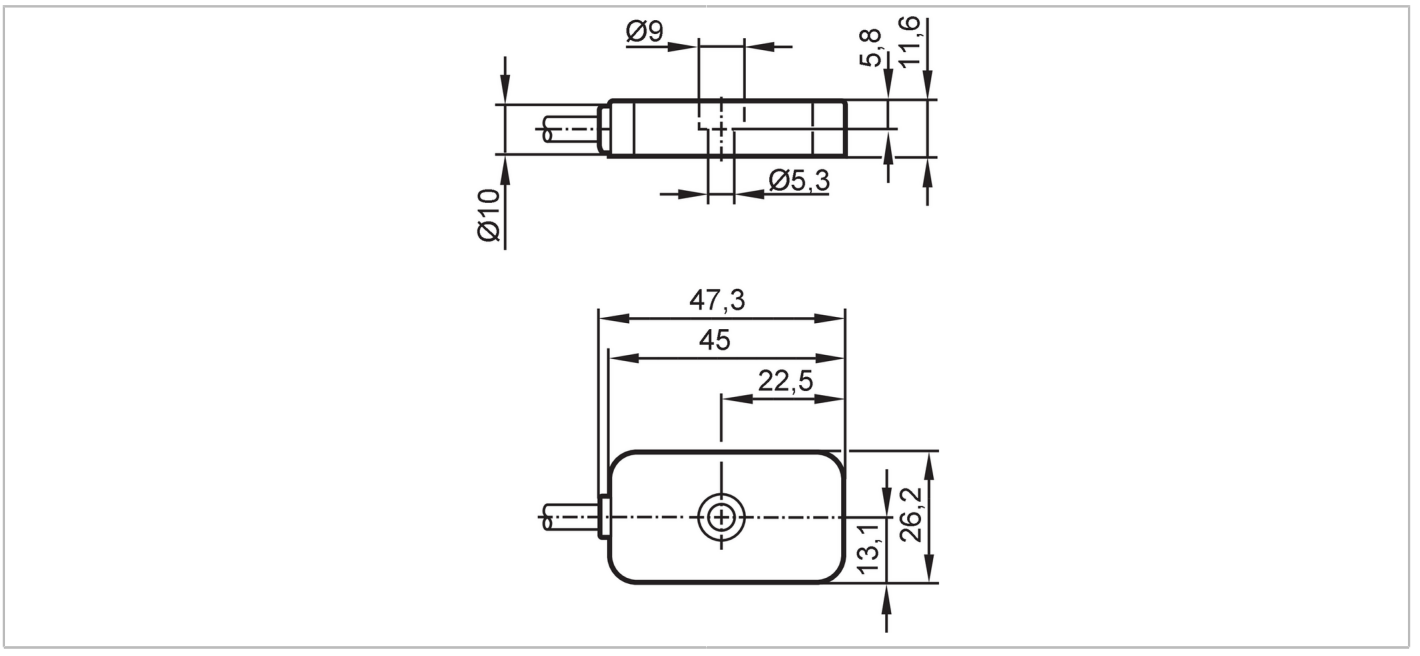


| | | |
|---|---|---|
| **Product characteristics** | | |
| Measuring range of vibration | [g] | -40...40 |
| Frequency range | [Hz] | 0...4500 |
| Measuring principle | | capacitive |
| **Application** | | |
| Special feature | | Screened cable; Drag chain suitability |
| **Electrical data** | | |
| Bias voltage DC | [V] | 11...16 |
| Operating current | [mA] | 4...6 |
| Min. insulation resistance | [MΩ] | 100;  (500 V DC) |
| Protection class | | III |
| Reverse polarity protection | | yes |
| Sensor type | | microelectromechanical system (MEMS) |
| **Measuring/setting range** | | |
| Measuring range of vibration | [g] | -40...40 |
| Frequency range | [Hz] | 0...4500 |
| Measuring principle | | capacitive |
| Max. transverse sensitivity | [%] | 5 |
| Number of measurement axes | | 3 |
| **Accuracy / deviations** | | |
| Accuracy | | 0...3 kHz: +/- 10 %<br>3...4.5 kHz: 3 dB |
| Measuring sensitivity | | 100 mV/g |
| Linearity deviation | [% of the span] | 2 |

# VSM104

## Accelerometer

VIBRATION SENSOR

| | | | |
|---|---|---|---|
| **Operating conditions** | | | |
| Ambient temperature | [°C] | -30...85 | |
| Storage temperature | [°C] | -30...100 | |
| Protection | | IP 67; IP 68; IP 69K | |
| **Tests / approvals** | | | |
| EMC | | DIN EN 61000-6-2 | |
| | | DIN EN 61000-6-3 | |
| Shock resistance | | DIN EN 60068-2-27 | 50 g 11 ms |
| Vibration resistance | | DIN EN 60068-2-6 | 20 g / 10...3000 Hz |
| MTTF | [years] | 529 | |
| UL approval | | Ta | ≤ 70 °C |
| | | Enclosure type | 1 |
| | | voltage supply | Limited Voltage/Current |
| | | UL approval no. | L003 |
| | | File number UL | E251902 |
| **Mechanical data** | | | |
| Weight | [g] | 427.6 | |
| Type of mounting | | mounting screw | |
| Dimensions | [mm] | 26.2 x 47.3 x 11.6 | |
| Materials | | housing: stainless steel (444/1.4404) | |
| Tightening torque | [Nm] | 3.5 | |
| Drag chain suitability | | yes | |
| Drag chain suitability | | bending radius for flexible use | min. 10 x cable diameter |
| | | bending radius for fixed installation | min. 4 x cable diameter |
| **Accessories** | | | |
| Items supplied | | socket head screw: 1 x (M5 x 12 mm) | |
| **Remarks** | | | |
| Pack quantity | | 1 pcs. | |

**Electrical connection**

Cable: 10 m, PUR, Ø 4.9 mm, shielded; Maximum cable length: 250 m; screen (connected to the housing); 5 x 0.14 mm²

brown IEPE X
white IEPE Z
blue GND
black self-test
grey IEPE Y
yellow screen