VSM103

Accelerometer

VIBRATION SENSOR

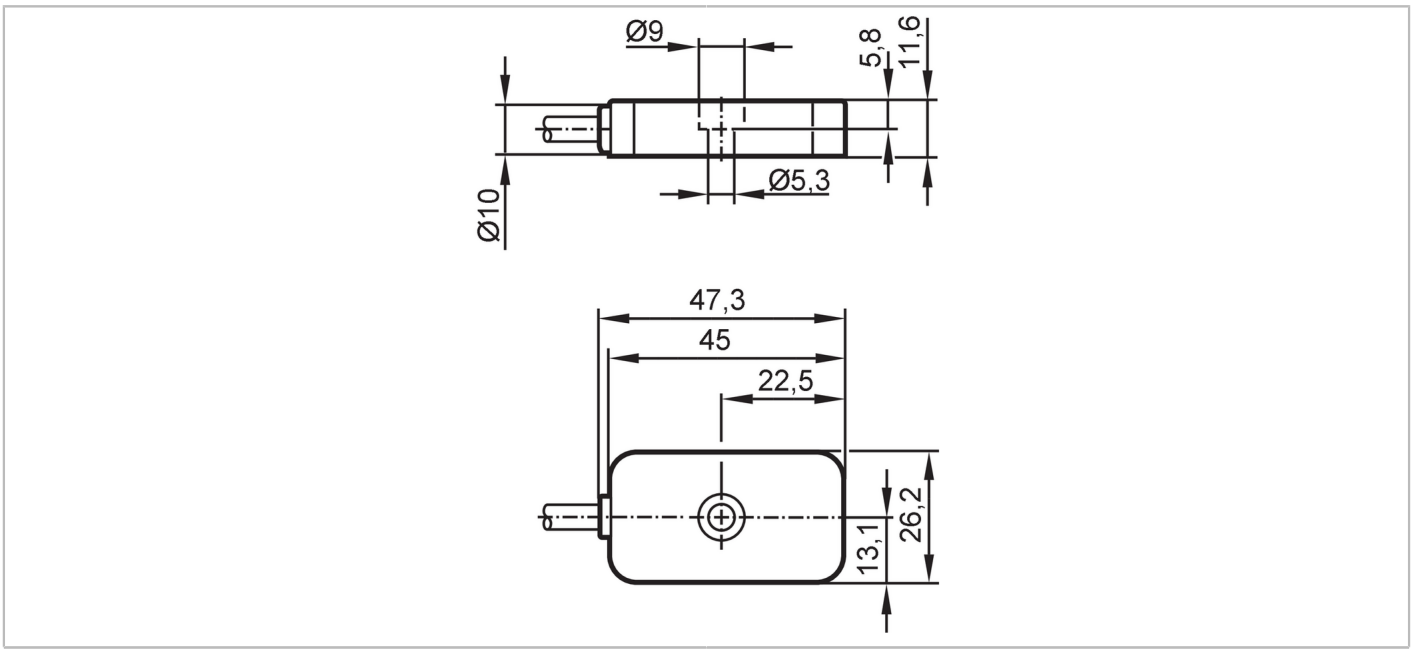

Product characteristics		
Measuring range of vibration	[g]	-40...40
Frequency range	[Hz]	0...4500
Measuring principle		capacitive
Application		
Special feature		Screened cable; Drag chain suitability
Electrical data		
Bias voltage DC	[V]	11...16
Operating current	[mA]	4...6
Min. insulation resistance	[MΩ]	100; (500 V DC)
Protection class		III
Reverse polarity protection		yes
Sensor type		microelectromechanical system (MEMS)
Measuring/setting range		
Measuring range of vibration	[g]	-40...40
Frequency range	[Hz]	0...4500
Measuring principle		capacitive
Max. transverse sensitivity	[%]	5
Number of measurement axes		3
Accuracy / deviations		
Accuracy		0...3 kHz: +/- 10 % 3...4.5 kHz: 3 dB
Measuring sensitivity		100 mV/g
Linearity deviation	[% of the span]	2

VSM103

Accelerometer

VIBRATION SENSOR

Operating conditions			
Ambient temperature	[°C]	-30...85	
Storage temperature	[°C]	-30...100	
Protection		IP 67; IP 68; IP 69K	

Tests / approvals			
EMC		DIN EN 61000-6-2	
		DIN EN 61000-6-3	
Shock resistance		DIN EN 60068-2-27	50 g 11 ms
Vibration resistance		DIN EN 60068-2-6	20 g / 10...3000 Hz
MTTF	[years]	529	
UL approval		Ta	≤ 70 °C
		Enclosure type	1
		voltage supply	Limited Voltage/Current
		UL approval no.	L005
		File number UL	E251902

Mechanical data			
Weight	[g]	105.6	
Type of mounting		mounting screw	
Dimensions	[mm]	26.2 x 47.3 x 11.6	
Materials		housing: stainless steel (444/1.4404)	
Tightening torque	[Nm]	3.5	
Drag chain suitability		yes	
Drag chain suitability		bending radius for flexible use	min. 10 x cable diameter
		bending radius for fixed installation	min. 4 x cable diameter

Accessories	
Items supplied	socket head screw: 1 x (M5 x 12 mm)

Remarks	
Pack quantity	1 pcs.

Electrical connection

Cable: 0.3 m, PUR, Ø 4.9 mm, shielded; Maximum cable length: 250 m; screen (connected to the housing); 5 x 0.14 mm²

Electrical connection - plug

Connector: M12; coding: A; Contacts: 5

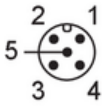

1	brown = IEPE X
2	white = IEPE Z
3	blue = GND
4	black = self-test
5	grey = IEPE Y