VVC005

Vibration sensor

VIBRATION IO-LINK SWITCH

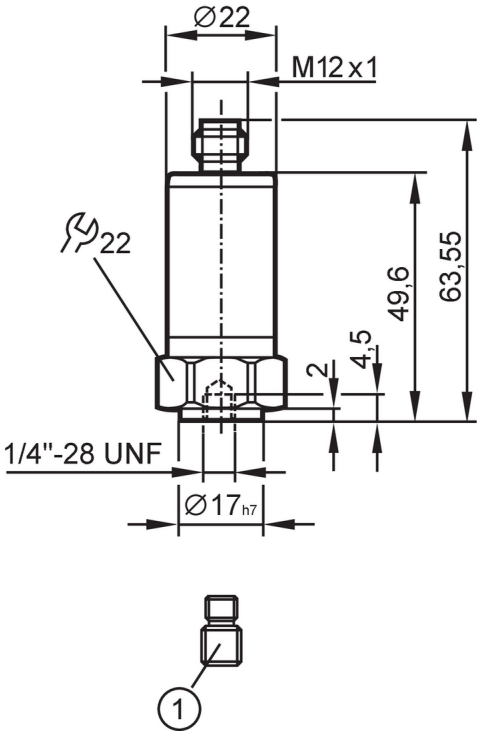

1 set screw ¼"-28 UNF / M8

Product characteristics		
Number of inputs and outputs		Number of digital outputs: 2
Application		
Application		industrial machines
Electrical data		
Operating voltage	[V]	18...30 DC
Current consumption	[mA]	< 50
Min. insulation resistance	[MΩ]	100; (500 V DC)
Protection class		III
Reverse polarity protection		yes
Sensor type		microelectromechanical system (MEMS)
Inputs / outputs		
Number of inputs and outputs		Number of digital outputs: 2
Outputs		
Output signal		switching signal; IO-Link
Electrical design		PNP/NPN; (configurable)
Number of digital outputs		2
Output function		normally open / normally closed
Max. voltage drop switching output DC	[V]	2
Max. current load per output	[mA]	100
Short-circuit protection		yes

VVC005

Vibration sensor

VIBRATION IO-LINK SWITCH

Type of short-circuit protection		pulsed	
Overload protection		yes	
Measuring/setting range			
Note on setpoint SP		parameterisable	
Frequency range	[Hz]	2...10000	
Measuring principle		capacitive	
Number of measurement axes		1	
v-RMS			
Measuring range of vibration	[mm/s]	0...45	
Set point SP	[mm/s]	0.2...45	
Reset point rP	[mm/s]	0...44.8	
In steps of	[mm/s]	0.2	
a-Peak / a-RMS			
Measuring range of vibration		0...50 g	0...490.3 m/s²
Set point SP		0.2...50 g	2...490.3 m/s²
Reset point rP		0...49.8 g	0...488.3 m/s²
In steps of		0.2 g	2 m/s²
Crest			
Measuring range of vibration		1...50	
Set point SP		2...50	
Reset point rP		1...49	
In steps of		1	
d-Peak2Peak			
Measuring range	[mm]	0...32	
Set point SP	[mm]	0.2...32	
Reset point rP	[mm]	0..31.8	
In steps of	[mm]	0.001	
Temperature measurement			
Measuring range	[°C]	-30...80	
Resolution	[°C]	0.1	
Set point SP	[°C]	-28...80	
Reset point rP	[°C]	-30...78	
In steps of	[°C]	2	
Accuracy / deviations			
Accuracy		≤ 4 kHz +/-10 %; ≥ 4...10 kHz: < 3 dB	
Accuracy	[K]	± 2,5 K + (0,2 x (Umgebungstemperatur - Oberflächentemperatur))	
Linearity deviation		2 %	
Software / programming			
Parameter setting options		Software	
Diagnostic functions		self-test	

VVC005

Vibration sensor

VIBRATION IO-LINK SWITCH

Interfaces			
Communication interface		IO-Link	
Transmission type		COM3 (230,4 kBaud)	
IO-Link revision		1.1	
SDCI standard		IEC 61131-9: 2013-07	
Profiles		BLOB	Binary Large Object transfer
		Common - I&D	Identification and Diagnosis
		Function	Measurement data, standard resolution
Required master port type		A	
Process data analogue		10	
Process data binary		2	
Min. process cycle time	[ms]	3.6	
Supported DeviceIDs		**Type of operation**	**DeviceID**
		default	1569
Note		For further information please see the IODD PDF file under "Downloads"	
Operating conditions			
Ambient temperature	[°C]	-30...80	
Storage temperature	[°C]	-30...80	
Protection		IP 67; IP 68; IP 69K	
Tests / approvals			
EMC		2014/30/EU	
		DIN EN 61000-6-2	
		DIN EN 61000-6-3	
Shock resistance		DIN EN 60068-2-27	50 g 11 ms
			500 g 1 ms
Vibration resistance		DIN EN 60068-2-6	20 g / 10...3000 Hz
UL approval		Ta	-30...70 °C
		Enclosure type	Type 1
		voltage supply	Limited Voltage/Current (Marking Class 2)
		UL approval no.	L002
		File number UL	E251902
Mechanical data			
Weight	[g]	107.6	
Type of mounting		set screw	
Materials		housing: stainless steel (316L/1.4404)	
Tightening torque	[Nm]	8	
Accessories			
Items supplied		set screw: 1 x (1/4" 28 UNF / M8 x 1,25 mm)	
Remarks			
Pack quantity		1 pcs.	

VVC005

Vibration sensor

VIBRATION IO-LINK SWITCH

Electrical connection

Connector: 1 x M12; coding: A; Contacts: 4; Maximum cable length: 20 m



1	L+
2	OUT2
3	L-
4	OUT1 switching output or IO-Link