AC2952

AS-Interface ProcessLine module

ProcessLine 2x (2DI/1DO) AS-i IP69K

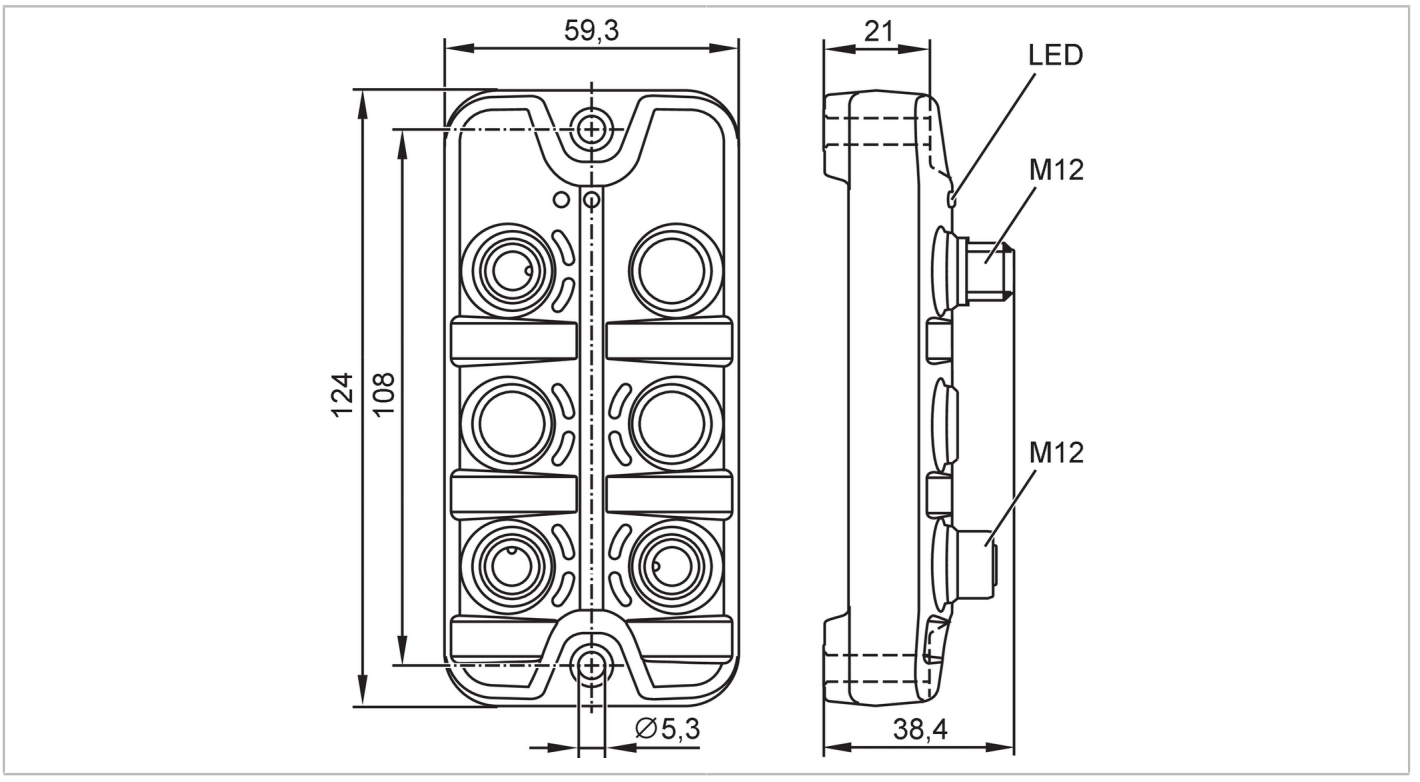

Application		
Application		hygienic and wet areas in the food industry
Electrical data		
Operating voltage	[V]	18...31.6 DC
Max. current consumption from AS-i	[mA]	250
Protection class		III
Max. current load total	[A]	180; (total current for all inputs and outputs supplied from AS-i)
Integrated watchdog		yes
Inputs / outputs		
Number of inputs and outputs		Number of digital inputs: 4; Number of digital outputs: 2
Inputs		
Number of digital inputs		4
Input circuit of digital inputs		PNP
Sensor supply of the inputs		AS-i
Voltage supply	[V]	18...30
Max. total current rating of inputs	[mA]	180
Input current High	[mA]	2...4
Input current Low	[mA]	0...1.5
Switching level high	[V]	> 11
Digital inputs protected against short circuits		yes

AC2952

AS-Interface ProcessLine module

ProcessLine 2x (2DI/1DO) AS-i IP69K

Outputs						
Number of digital outputs		2				
Circuit		PNP				
Voltage range DC	[V]	15...30				
Max. current load per output	[mA]	100				
Total current rating of all outputs	[A]	0.18				
Short-circuit proof		yes				
Electrically separated		yes				
Actuator supply outputs		AS-i				
Operating conditions						
Ambient temperature	[°C]	-25...60				
Storage temperature	[°C]	-25...85				
Max. relative air humidity	[%]	90; (non condensing)				
Max. height above sea level	[m]	4000				
Protection		IP 65; IP 66; IP 67; IP 69K; (operation with stainless steel protective caps: IP 69K)				
Pollution degree		2				
Chemical media		ISO 16750-5	HLP, CC, DB, DC, DD, CA			
		NEMA 250 5.13.1	AA			
Tests / approvals						
EMC		EN 62026-2				
		EN 61000-6-2				
		EN 61000-6-3				
		IEC 61131-2 Type 3				
Shock resistance		DIN EN 60068-2-27				
Vibration resistance		DIN EN 60068-2-6				
		DIN EN 60068-2-64				
MTTF	[years]	178				
UL approval		File number UL	E205959			
AS-i classification						
AS-i version		2.11; 3.0				
Extended addressing mode		yes				
AS-i profile		S-7.A.E				
AS-i I/O configuration	[hex]	0				
AS-i ID code	[hex]	A.E				
Assignment of the data bits		data bit	D0	D1	D2	D3
		input	1	2	3	4
		socket	I-1/2	I-1/2	I-3/4	I-3/4
		pin	4	2	4	2
		Output	1	2	-	-
		socket	O-1	O-2	-	-
		pin	4	4	-	-
Mechanical data						
Weight	[g]	232.6				
Housing		rectangular				
Type of mounting		backplane mounting				

AC2952

AS-Interface ProcessLine module

ProcessLine 2x (2DI/1DO) AS-i IP69K

Dimensions [mm]	124 x 59.3 x 38.4	
Materials	housing: PA grey; plugs and sockets: stainless steel (316L/1.4404); Sealing: EPDM	

Displays / operating elements

Display	switching status	LED, yellow IN1...IN4; OUT1...OUT2
	operation	LED, green AS-i
	error	LED, red

Remarks

Remarks	Do not connect any of the following points to an external potential:
	L-; L+; IN1; IN2; IN3; IN4
	The connections are electrically connected with the AS-i cable.
Pack quantity	1 pcs.

Electrical connection - Power IN

Connector: M12; coding: A; Contacts: 4



1	AS-i +
2	n.c.
3	AS-i -
4	n.c.

Electrical connection - inputs / outputs

Connector: M12; coding: A; Contacts: 4

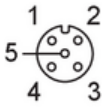

I-1/2 / O-1

1	L+
2	IN2 DI2
3	L-
4	MP1 DI1 / DO1
5	n.c.

I-3/4 / O-2

1	L+
2	IN4 DI4
3	L-
4	MP2 DI3 / DO2
5	n.c.