DV2300

3_Segment_Signalleuchte_mit_IO_Link_Ansteuerung

LED-Tower-3/IOL/Bracket

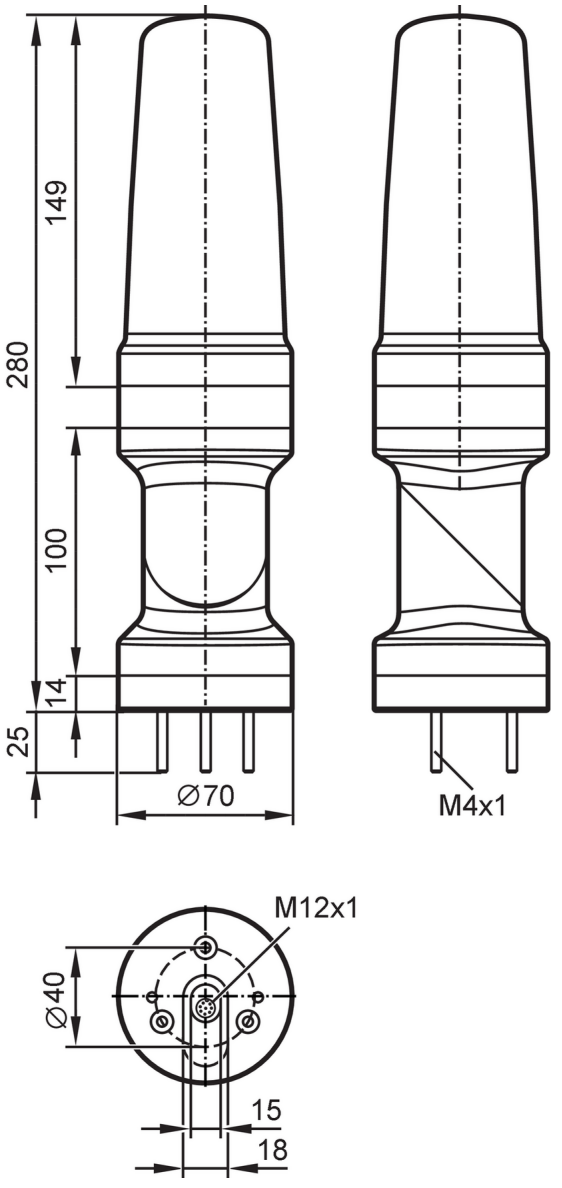

IO-Link

Application		
Application		signaling machine conditions
Electrical data		
Operating voltage	[V]	18...30 DC; (to SELV/PELV)
Nominal voltage DC	[V]	24
Current consumption	[mA]	< 200
Inputs		
Input current High	[mA]	6
Interfaces		
Communication interface		IO-Link
Transmission type		COM2 (38,4 kBaud)
IO-Link revision		1.1

DV2300

3_Segment_Signalleuchte_mit_IO_Link_Ansteuerung

LED-Tower-3/IOL/Bracket

SDCI standard		IEC 61131-9	
SIO mode		yes	
Required master port class		A	
Min. process cycle time	[ms]	8	
Supported DeviceIDs		**Type of operation**	**DeviceID**
		default	1467
Operating conditions			
Ambient temperature	[°C]	-25...50	
Storage temperature	[°C]	-40...75	
Max. relative air humidity	[%]	90	
Air pressure	[kPa]	< 106	
Max. height above sea level	[m]	2000	
Protection		IP 65	
Tests / approvals			
MTTF	[years]	492	
UL approval		voltage supply	Class 2
Mechanical data			
Weight	[g]	465.7	
Type of mounting		Mounting base	
Dimensions	[mm]	Ø 70 / L = 280	
Material		housing: ABS; lens: PC	
Displays / operating elements			
Display		LED segment	3 x 4 LED
Accessories			
Accessories (optional)		mounting base, E89060	
		wall bracket, E89061	
		Mounting adapter, E89063	
		bracket with lateral cable entry, E89064	
		mounting tube, E89065	
		mounting tube, E89066	
		mounting tube, E89067	
Remarks			
Remarks		Further information is available in the manual.	
Pack quantity		1 pcs.	

Electrical connection - plug

Connector: M12; coding: A; Contacts: 4

1	L+
2	not used
3	L-
4	IO-Link (C/Q)

DV2300

3_Segment_Signalleuchte_mit_IO_Link_Ansteuerung

LED-Tower-3/IOL/Bracket

Diagrams and graphs

Installation

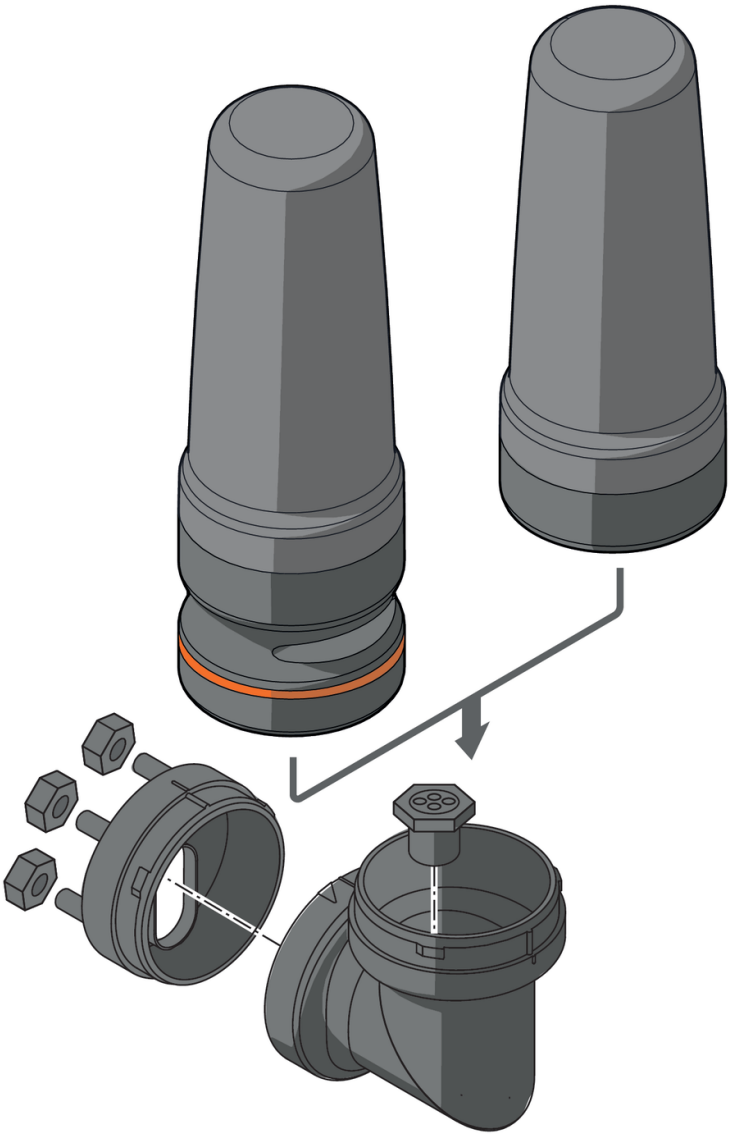

DV2300

3_Segment_Signalleuchte_mit_IO_Link_Ansteuerung

LED-Tower-3/IOL/Bracket

Installation

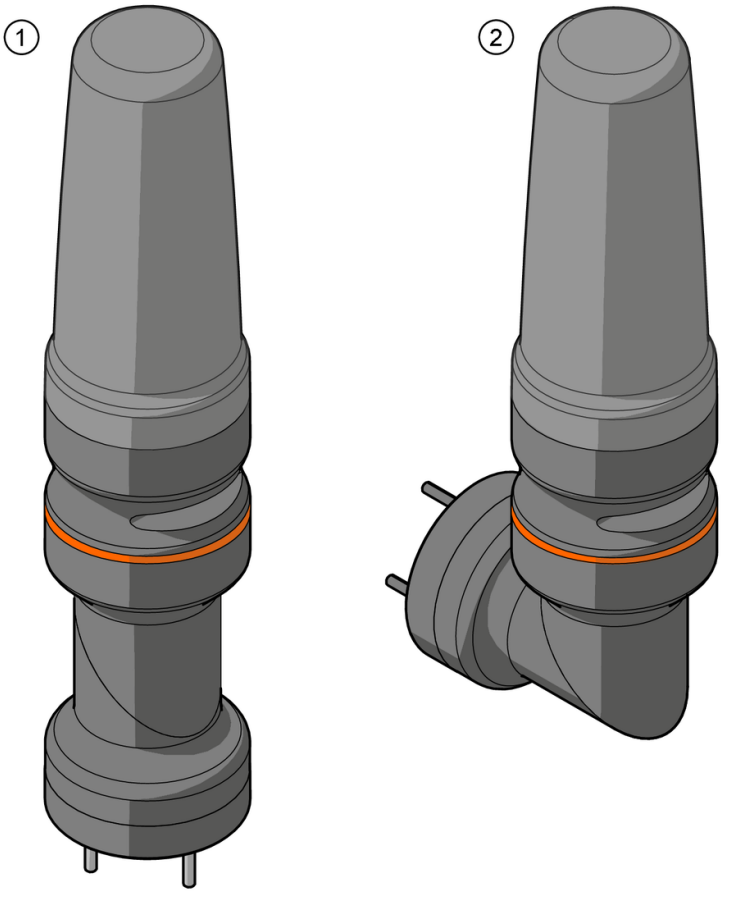

1 mounting on a horizontal surface

2 mounting on a vertical surface

DV2300

3_Segment_Signalleuchte_mit_IO_Link_Ansteuerung

LED-Tower-3/IOL/Bracket

base mounting

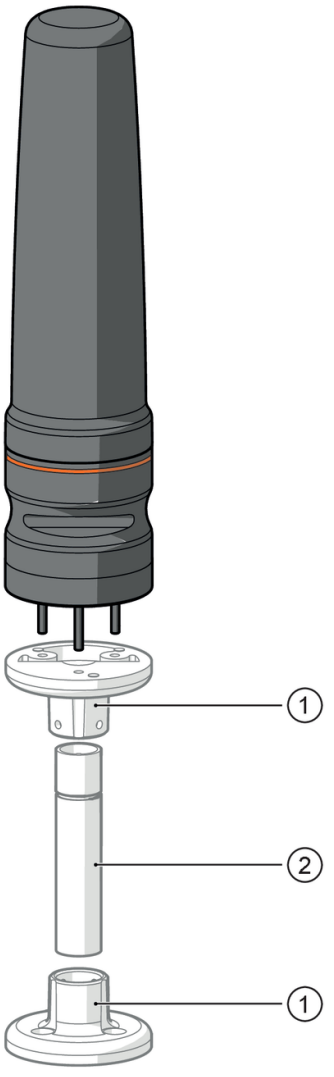

1 E89060 not supplied

2 E89065, E89066, E89067 not supplied

DV2300

3_Segment_Signalleuchte_mit_IO_Link_Ansteuerung

LED-Tower-3/IOL/Bracket

wall mounting

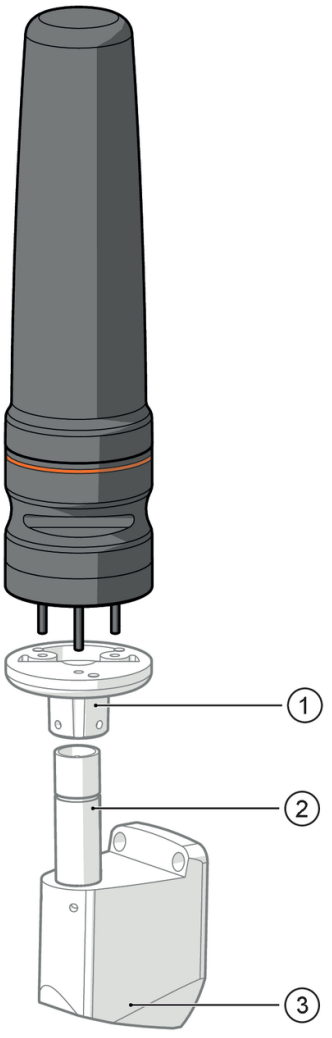

1 E89060 not supplied

2 E89065, E89066, E89067 not supplied

3 E89061 not supplied