EBF007

Y-splitter

ZDO2H050VAS0000-00STGH050VAS

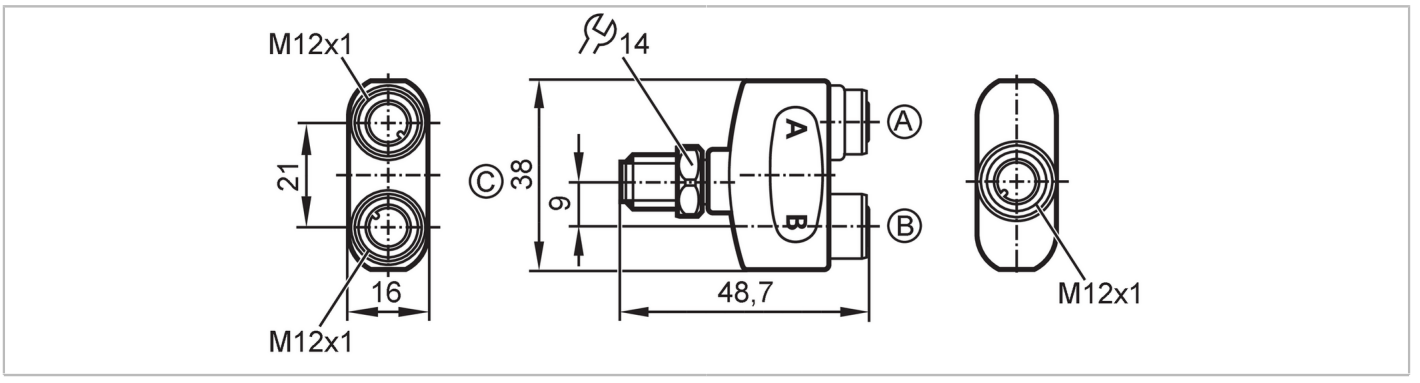

Application		
Special feature		Free from silicone; Gold-plated contacts
Application		hygienic and wet areas in the food industry
Free from silicone		yes
Electrical data		
Operating voltage	[V]	< 60 AC/DC; (cULus: 30 AC / 42 DC)
Protection class		II
Max. current load per module/slot	[A]	4
Max. current load total	[A]	4
Overall current rating (UL)	[A]	3
Operating conditions		
Ambient temperature	[°C]	-25...100
Note on ambient temperature		cULus: ...65 °C
Storage temperature	[°C]	-25...55
Storage humidity	[%]	10...100
Other climatic conditions for storage according to stated class		1K22/ DIN 60721-3-1
Protection		IP 65; IP 67; IP 68; IP 69K
Tests / approvals		
UL approval	voltage supply	Class 2
	File number UL	E191684
Mechanical data		
Weight	[g]	34.1
Materials		housing: PA Halogen-free; Sealing: EPDM
Moulded-body material		PA, Halogen-free
Material nut		stainless steel (316L/1.4404)
Remarks		
Pack quantity		1 pcs.

EBF007

Y-splitter

ZDO2H050VAS0000-00STGH050VAS

Electrical connection - plug

Connector: 1 x M12; coding: A; Contacts: 5, gold-plated; Moulded body: PA, Halogen-free; Locking: stainless steel (316L/1.4404); Tightening torque: 0.6...1.2 Nm

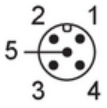

Connection

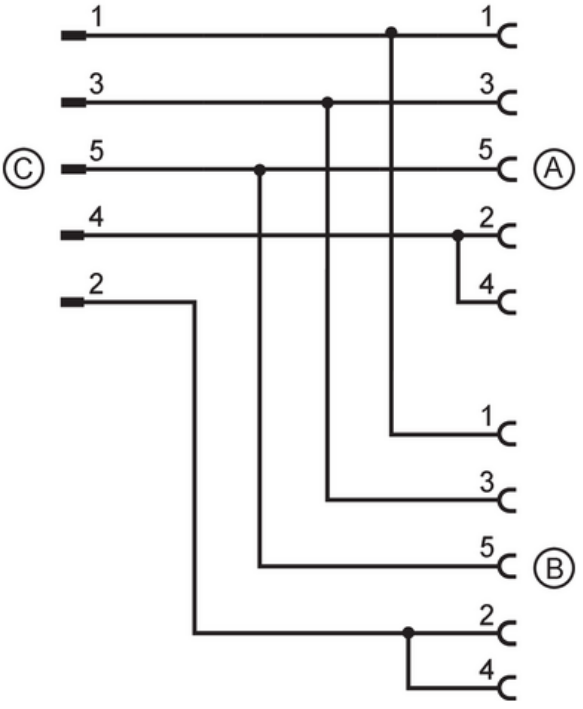

connection to IEC 61076-2-101

Electrical connection - socket

Connector: 2 x M12; coding: A; Contacts: 5, gold-plated; Moulded body: PA, Halogen-free; Locking: stainless steel (316L/1.4404); Tightening torque: 0.6...1.5 Nm

