EBF011

Y-splitter

ZDO2H040VAS0000-00STGH040VAS

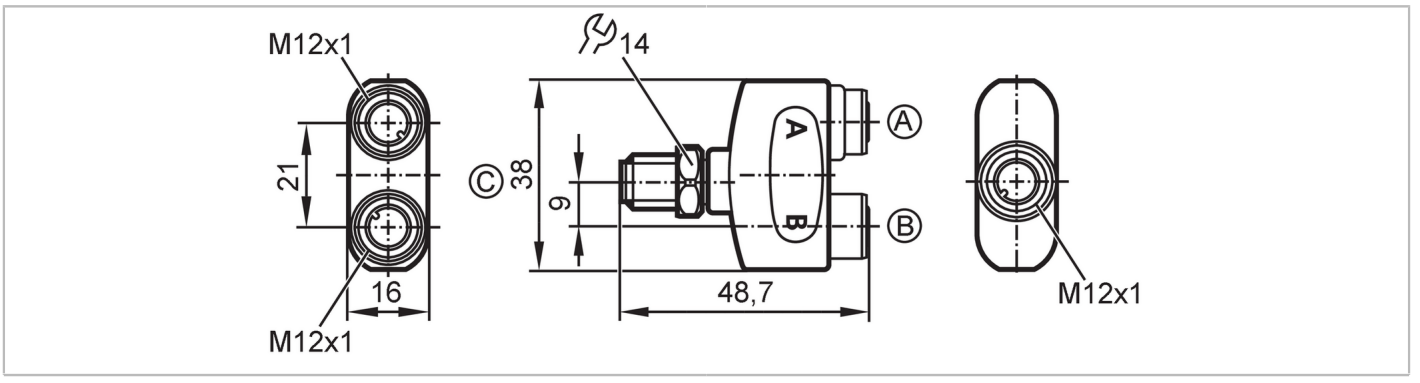

Application		
Special feature		Free from silicone; Gold-plated contacts
Application		hygienic and wet areas in the food industry; logic AND function
Free from silicone		yes
Electrical data		
Operating voltage	[V]	< 60 AC/DC; (cULus: 30 AC / 42 DC)
Protection class		II
Max. current load per module/slot	[A]	4
Max. current load total	[A]	4
Operating conditions		
Ambient temperature	[°C]	-25...100
Note on ambient temperature		cULus: ...65 °C
Storage temperature	[°C]	-25...55
Storage humidity	[%]	10...100
Other climatic conditions for storage according to stated class		1K22/ DIN 60721-3-1
Protection		IP 65; IP 67; IP 68; IP 69K
Tests / approvals		
UL approval	voltage supply	Class 2
	File number UL	E191684
Mechanical data		
Weight	[g]	33.8
Materials		housing: PA Halogen-free
Material nut		stainless steel (316L/1.4404)
Sealing material		EPDM
Remarks		
Pack quantity		1 pcs.

EBF011

Y-splitter

ZDO2H040VAS0000-00STGH040VAS

Electrical connection - plug C

Connector: 1 x M12; coding: A; Contacts: 5, gold-plated; Locking: stainless steel (316L/1.4404); Tightening torque: 0.6...1.2 Nm

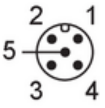

Connection

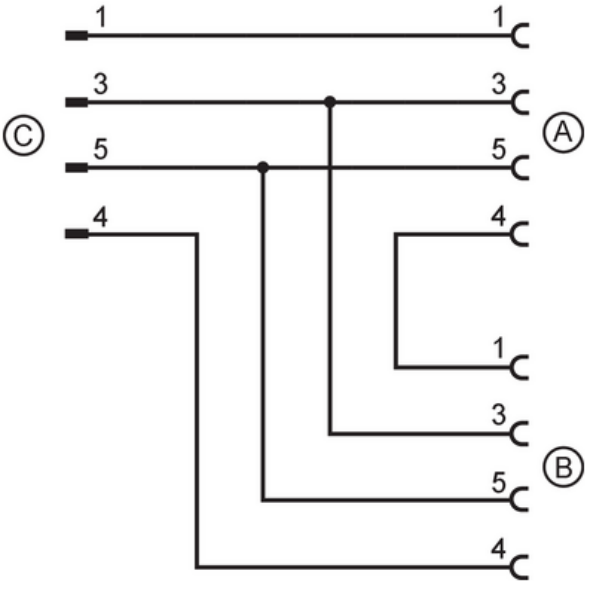

Electrical connection - socket A/B

Connector: 2 x M12; coding: A; Contacts: 5, gold-plated; Locking: stainless steel (316L/1.4404); Sealing: EPDM; Tightening torque: 0.6...1.5 Nm

