VSE101

Diagnostic electronics for vibration sensors

DIAGNOSTIC ELECTRONICS

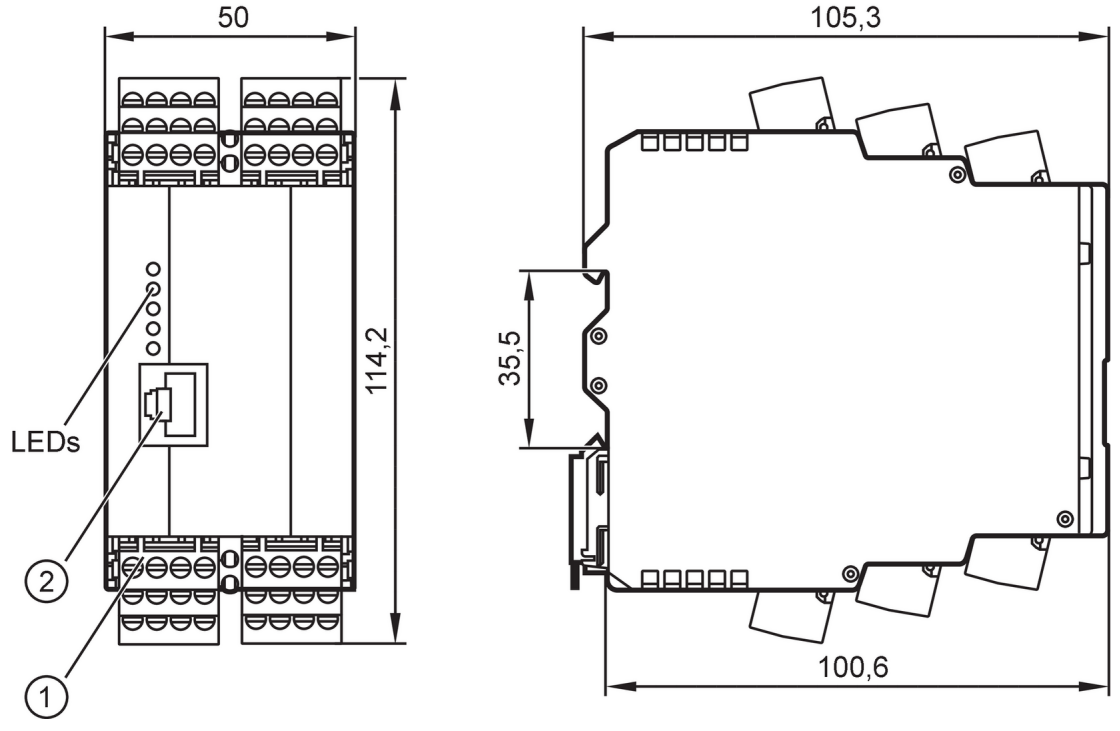

1 COMBICON connector
2 Ethernet interface

Application			
Design			housing for DIN rail mounting, parameter setting via PC software, VES004
Application			continuous vibration monitoring
Electrical data			
Operating voltage tolerance	[%]		20
Operating voltage	[V]		24 DC; (when using the IEPE input: 24 V + 20%; IEPE = Integrated Electronics Piezo Electric)
Current consumption	[mA]		200; (24 V DC)
Protection class			III
Inputs / outputs			
Total number of inputs and outputs			16; (parameterisable)
Multifunktionale Ein-/Ausgänge			
Digital			
Number			8
Connection			I/O1...I/O8
Digital input		Circuit	HTL
Digital output		Electrical design	PNP
		Output function	normally open / normally closed (configurable)
Inputs			
Dynamic inputs			
Number			4

VSE101

Diagnostic electronics for vibration sensors

DIAGNOSTIC ELECTRONICS

Connection	S1...S4	
Analogue input	function type	Current, dynamic
	input range	0...10 mA / IEPE / 4...20 mA
	input frequency [Hz]	0,1...12000
	Resolution	16 bit
	sampling rate	100 kSamples
Process value inputs, analogue / digital		
Number	2	
Connection	IN1 / U-IN1, IN2 / U-IN2	
Digital input	function type	pulse
	Circuit	HTL
	frequency [Hz]	0,1...100000
Analogue input	function type	Current
	input range [mA]	4...20
	Resolution	12 bit
Analogue input	function type	Voltage
	Connection	U-IN1, U-IN2
	input range [V]	0...10
	Resolution	12 bit
Outputs		
Max. load [Ω]	500	
Short-circuit protection	yes	
Type of short-circuit protection	pulsed	
Overload protection	yes	
Multi-function outputs, analogue / digital		
Number	1	
Connection	OU1 / U-OUT	
Digital output	Electrical design	PNP
	Output function	normally open / normally closed (configurable)
Analogue output	function type	Current
	output range [mA]	4...20
Analogue output	function type	Voltage
	Connection	U-OUT
	output range [V]	0...10
Digital outputs		
Number	1	
Connection	OU2	
Digital output	Electrical design	PNP
	Output function	normally open / normally closed (configurable)
Interfaces		
Communication interface	Ethernet	
Number of Ethernet interfaces	1	
Ethernet		
Transmission standard	10Base-T; 100Base-TX	

VSE101

Diagnostic electronics for vibration sensors

DIAGNOSTIC ELECTRONICS

Transmission rate		10/100 MBit/s	
Connector type		RJ45	
Protocol		TCP/IP	
Factory settings		IP address: 192.168.0.1	
		port 3321	
Operating conditions			
Ambient temperature	[°C]	0...70	
Storage temperature	[°C]	0...70	
Protection		IP 20	
Tests / approvals			
EMC		EN IEC 61000-6-2	
		EN IEC 61000-6-4	
MTTF	[years]	89	
UL approval		Ta	70 °C
		Enclosure type	Type 1
		voltage supply	Limited Voltage/Current
		File number UL	E251902
Mechanical data			
Weight	[g]	442.6	
Type of mounting		mounting on DIN rail; (TH35 (EN 60715))	
Dimensions	[mm]	114.2 x 50 x 105.3	
Materials		Housing: PA	
Data memories			
History memory		yes	
Data memory buffered		yes	
Data memory type		ring memory; FIFO	
Real-time clock		yes	
Memory location		internal	
Memory interval		min. 1 min	
Memory size		881664 data records	
Accessories			
Accessories (optional)		cross-over Ethernet patch cable for the direct connection to the PC	
Remarks			
Pack quantity		1 pcs.	

VSE101

Diagnostic electronics for vibration sensors

DIAGNOSTIC ELECTRONICS

Electrical connection

COMBICON: ; Maximum cable length: 250 m

Connection

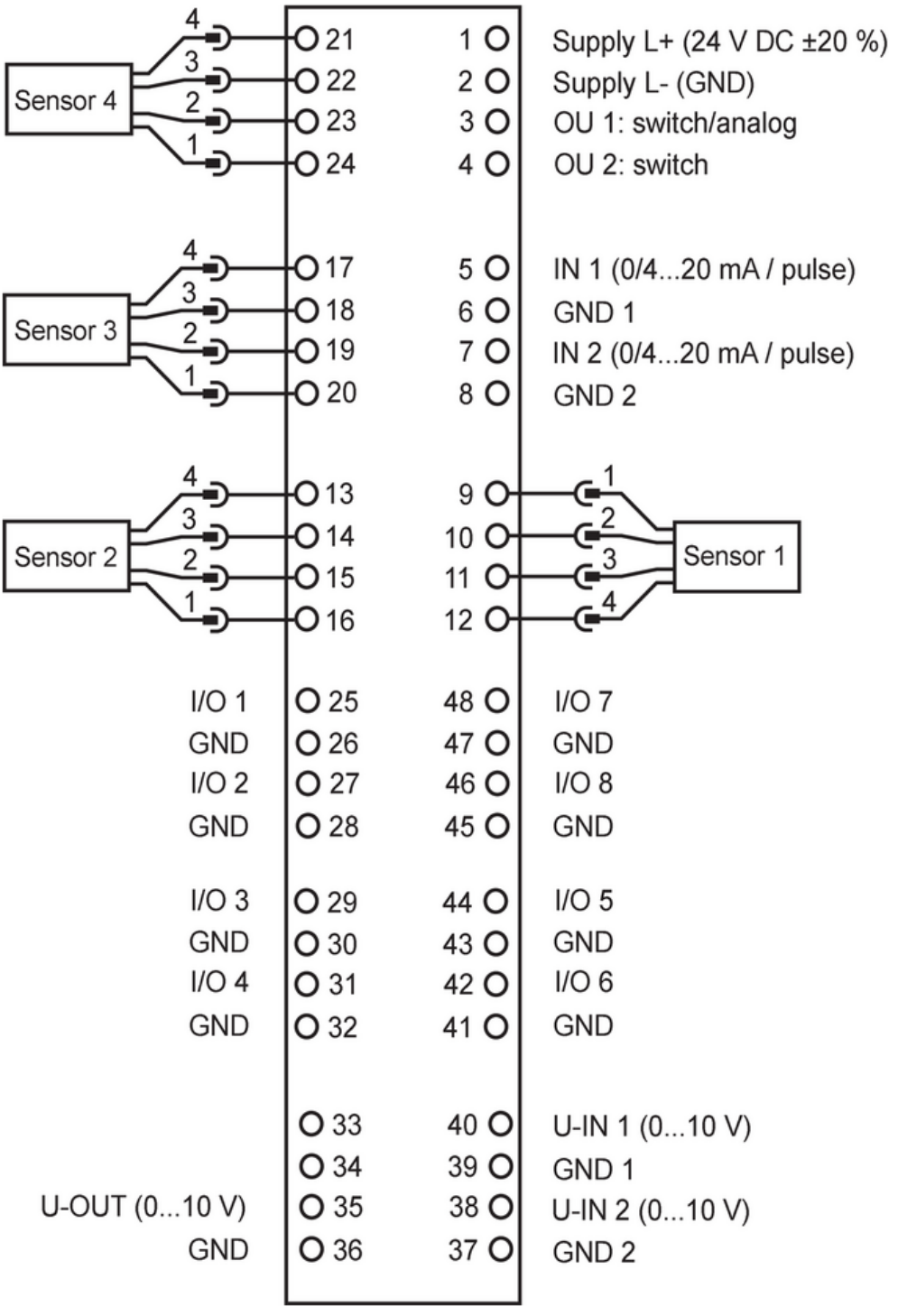

VSE101

Diagnostic electronics for vibration sensors

DIAGNOSTIC ELECTRONICS

Electrical connection - Ethernet

Connector: RJ45; Contacts: 4

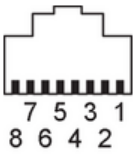

1	TxD +
2	TxD -
3	RxD +
4	n.c.
5	n.c.
6	RxD -
7	n.c.
8	n.c.