VSE003

Diagnostic electronics for vibration sensors

DIAGNOSTIC ELECTRONICS

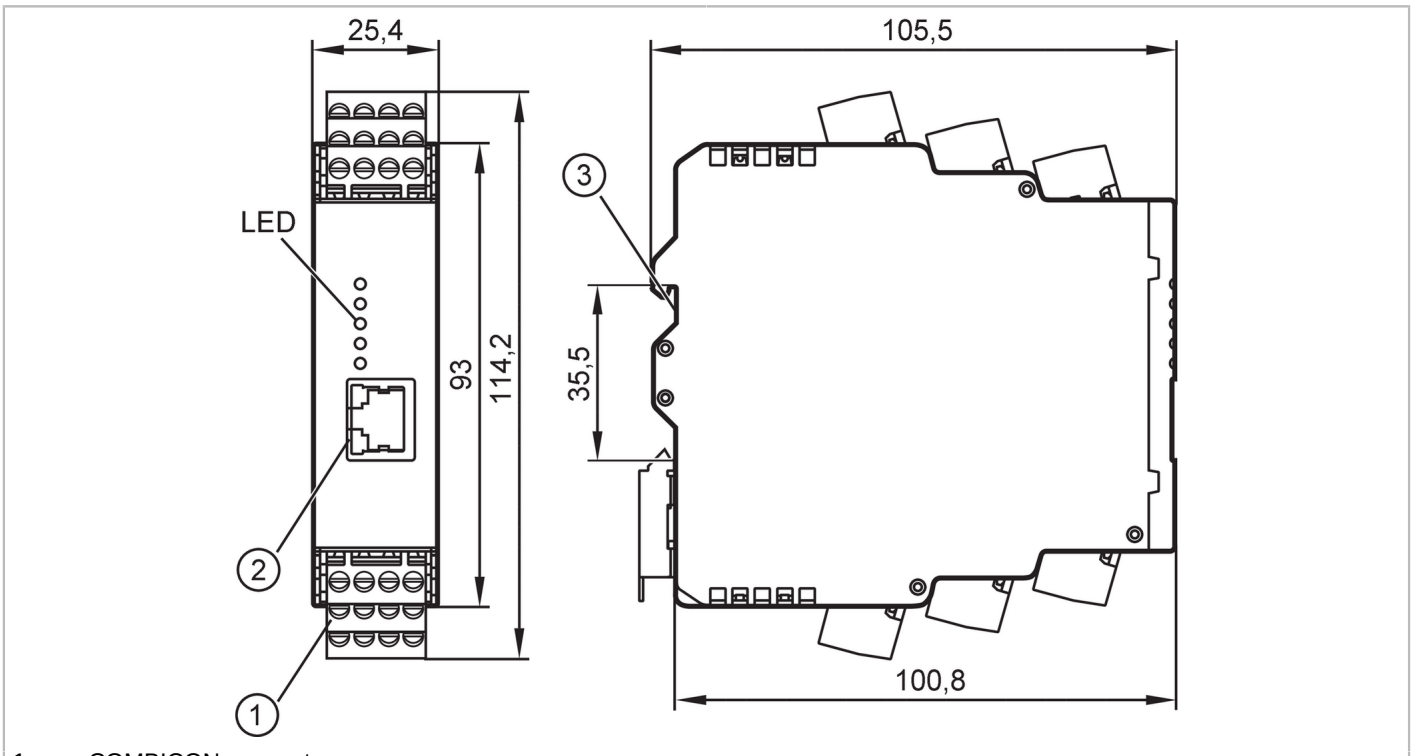

1 COMBICON connector
2 Ethernet interface
3 DIN rail holder

Application			
Design			housing for DIN rail mounting, parameter setting via PC software, VES004
Application			continuous vibration monitoring
Electrical data			
Operating voltage tolerance	[%]		20
Operating voltage	[V]		24 DC; (when using the IEPE input: 24 V + 20%; IEPE = Integrated Electronics Piezo Electric)
Current consumption	[mA]		200; (24 V DC)
Protection class			III
Inputs / outputs			
Total number of inputs and outputs			8; (parameterisable)
Inputs			
Dynamic inputs			
Number			4
Connection			S1...S4
Analogue input		function type	Current, dynamic
		input range	0...10 mA / IEPE / 4...20 mA
		input frequency [Hz]	0,1...12000
		Resolution	16 bit
		sampling rate	100 kSamples
Process value inputs, analogue / digital			
Number			2

VSE003

Diagnostic electronics for vibration sensors

DIAGNOSTIC ELECTRONICS

Connection		IN1, IN2	
Digital input		function type	pulse
		Circuit	HTL
		frequency [Hz]	0,1...100000
Analogue input		function type	Current
		input range [mA]	4...20
		Resolution	12 bit
Outputs			
Max. load	[Ω]	500	
Short-circuit protection		yes	
Type of short-circuit protection		pulsed	
Overload protection		yes	
Multi-function outputs, analogue / digital			
Number		1	
Connection		OU1	
Digital output		Electrical design	PNP
		Output function	normally open / normally closed (configurable)
Analogue output		function type	Current
		output range [mA]	4...20
Digital outputs			
Number		1	
Connection		OU2	
Digital output		Electrical design	PNP
		Output function	normally open / normally closed (configurable)
Interfaces			
Communication interface		Ethernet	
Number of Ethernet interfaces		1	
Ethernet			
Transmission standard		10Base-T; 100Base-TX	
Transmission rate		10/100 MBit/s	
Connector type		RJ45	
Protocol		TCP/IP	
Factory settings		IP address: 192.168.0.1	
		port 3321	
Operating conditions			
Ambient temperature	[°C]	0...70	
Storage temperature	[°C]	0...70	
Protection		IP 20	
Tests / approvals			
EMC		EN IEC 61000-6-2	
		EN IEC 61000-6-4	
MTTF	[years]	89	

VSE003

Diagnostic electronics for vibration sensors

DIAGNOSTIC ELECTRONICS

Mechanical data		
Weight	[g]	327
Type of mounting		mounting on DIN rail; (TH35 (EN 60715))
Dimensions	[mm]	114.2 x 25.4 x 105.5
Materials		Housing: PA
Data memories		
History memory		yes
Data memory buffered		yes
Data memory type		ring memory; FIFO
Real-time clock		yes
Memory location		internal
Memory interval		min. 1 min
Memory size		881664 data records
Accessories		
Accessories (optional)		cross-over Ethernet patch cable for the direct connection to the PC
Remarks		
Pack quantity		1 pcs.
Electrical connection		

COMBICON: ; Maximum cable length: 250 m

Connection

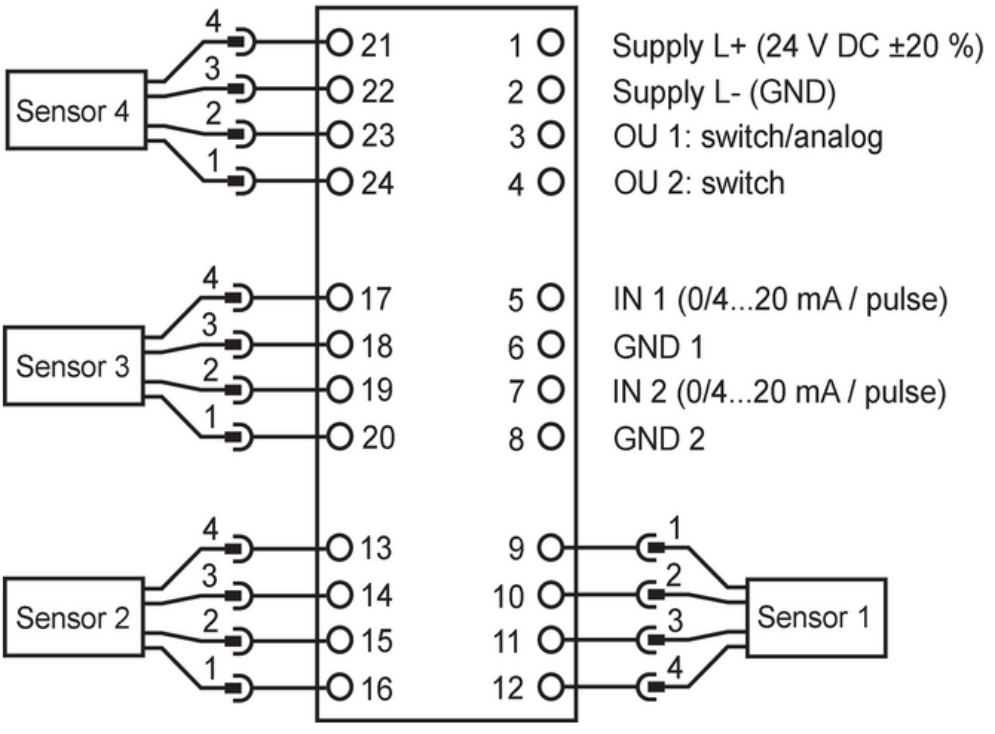

VSE003

Diagnostic electronics for vibration sensors

DIAGNOSTIC ELECTRONICS

Electrical connection - Ethernet

Connector: RJ45; Contacts: 4

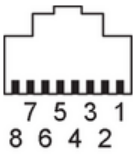

1	TxD +
2	TxD -
3	RxD +
4	n.c.
5	n.c.
6	RxD -
7	n.c.
8	n.c.