DV1521

5-segment light tower with IO-Link data output

LED-Tower-5/MDA/

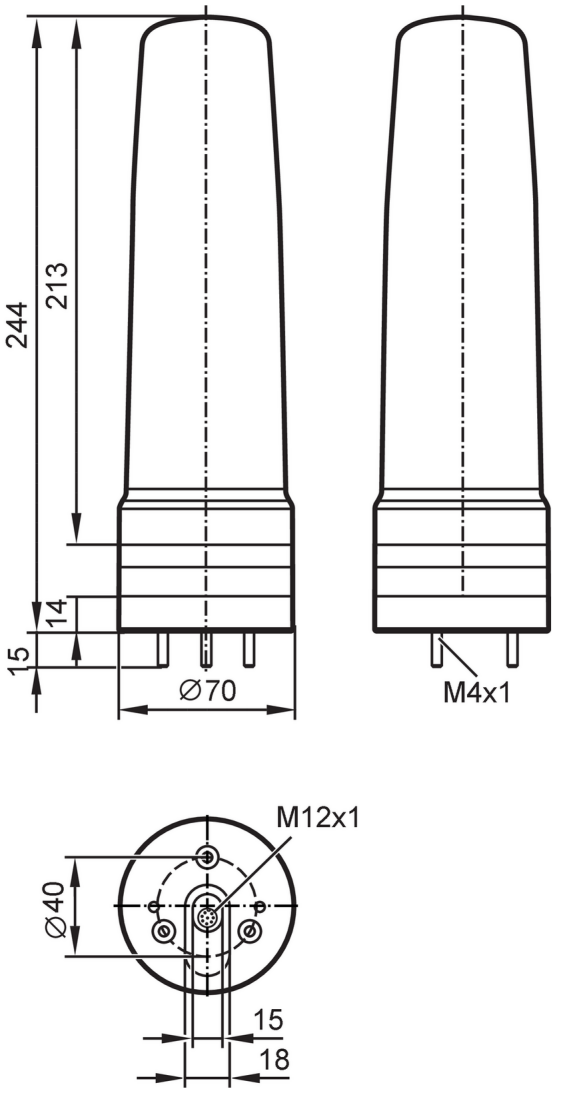

Application		
Application		Display and transfer of machine states to higher-level evaluation software via IO-Link
Electrical data		
Operating voltage	[V]	18...30 DC; (to SELV/PELV)
Nominal voltage DC	[V]	24
Current consumption	[mA]	< 200
Inputs / outputs		
Number of inputs and outputs		Number of digital inputs: 6
Inputs		
Number of digital inputs		6
Input current High	[mA]	6
Interfaces		
Communication interface		IO-Link
Transmission type		COM2 (38,4 kBaud)

DV1521

5-segment light tower with IO-Link data output

LED-Tower-5/MDA/

IO-Link revision		1.1	
SDCI standard		IEC 61131-9	
Profiles		Common - I&D	Identification and Diagnosis
SIO mode		yes	
Required master port type		A	
Min. process cycle time	[ms]	8	
Supported DeviceIDs		**Type of operation**	**DeviceID**
		default	1700

Operating conditions

Ambient temperature	[°C]	-25...50
Storage temperature	[°C]	-40...75
Max. relative air humidity	[%]	90
Air pressure	[kPa]	< 106
Max. height above sea level	[m]	2000
Protection		IP 65

Mechanical data

Weight	[g]	412.9
Dimensions	[mm]	Ø 70 / L = 244
Materials		housing: ABS; lens: PC

Displays / operating elements

Display	status	1 x LED, green
	LED segment	5 x 4 LED

Accessories

Accessories (optional)	mounting base, E89060
	wall bracket, E89061
	mounting adapter, E89063
	bracket with lateral cable entry, E89064
	mounting tube, E89065
	mounting tube, E89066
	mounting tube, E89067

Remarks

Remarks	For further information please see the operating instructions.
Pack quantity	1 pcs.

Electrical connection - plug

Connector: M12; coding: A; Contacts: 8

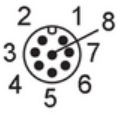

DV1521

5-segment light tower with IO-Link data output

LED-Tower-5/MDA/

Connection

1	digital input LED segment 5
2	not used
3	digital input LED segment 3
4	digital input LED segment 2
5	GND
6	digital input LED segment 1
7	digital input LED segment 4
8	IO-Link (C/Q)

Diagrams and graphs

Installation

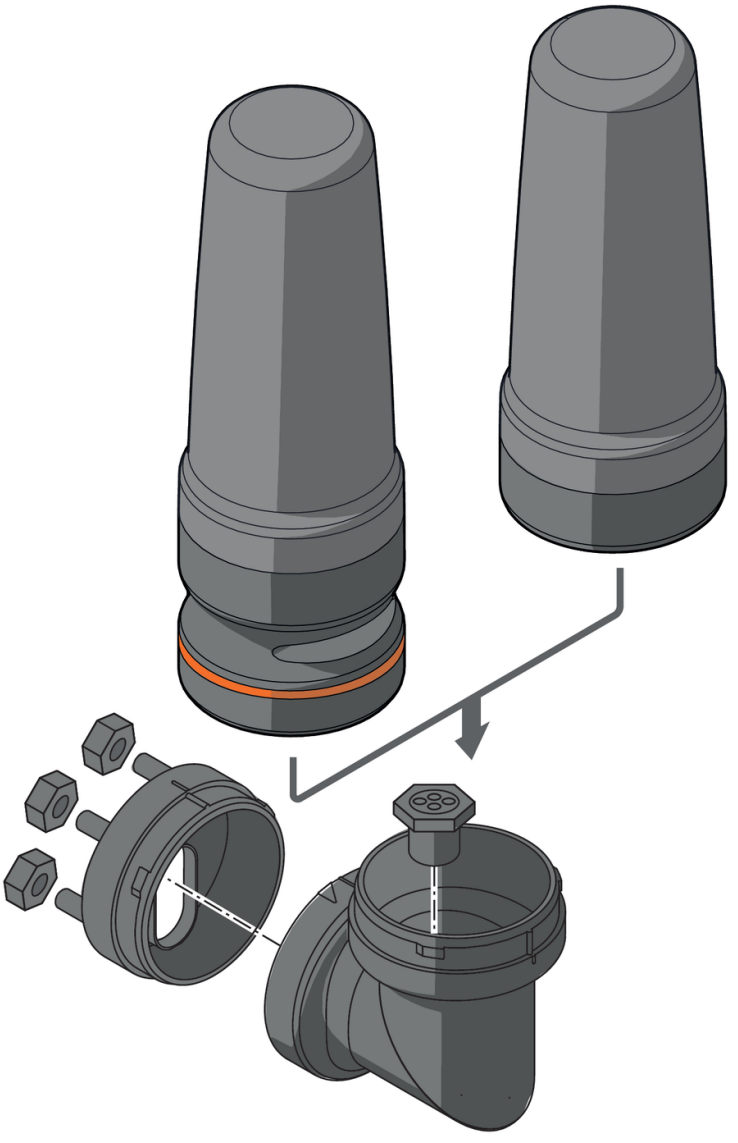

DV1521

5-segment light tower with IO-Link data output

LED-Tower-5/MDA/

Installation

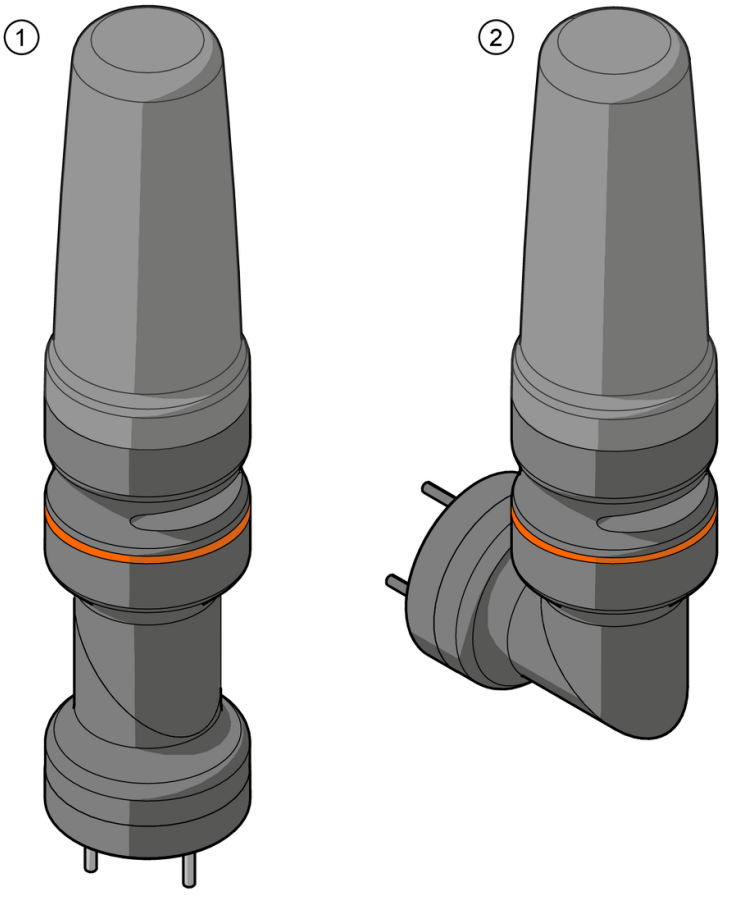

1 mounting on a horizontal surface

2 mounting on a vertical surface

DV1521

5-segment light tower with IO-Link data output

LED-Tower-5/MDA/

base mounting

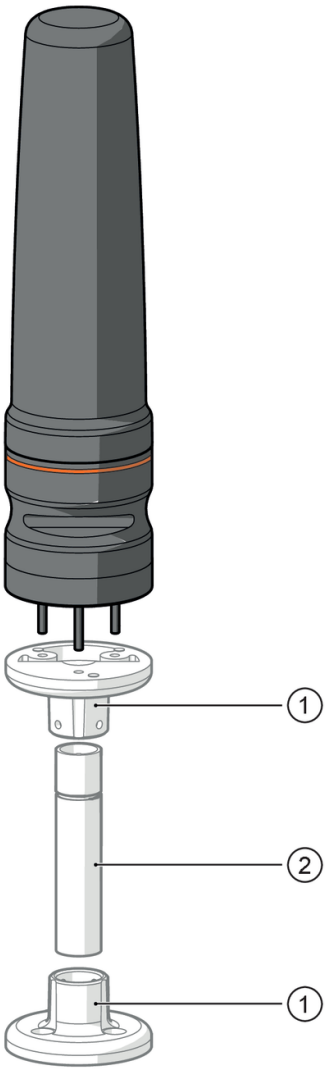

1 E89060 not supplied

2 E89065, E89066, E89067 not supplied

DV1521

5-segment light tower with IO-Link data output

LED-Tower-5/MDA/

wall mounting

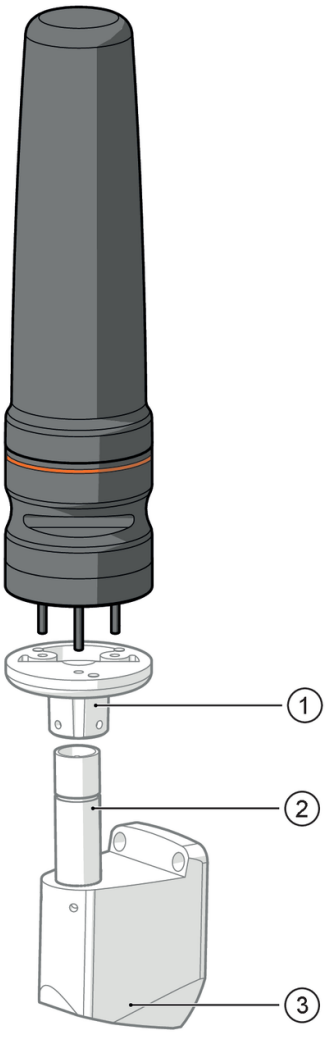

1 E89060 not supplied

2 E89065, E89066, E89067 not supplied

3 E89061 not supplied