VSM102

Accelerometer

VIBRATION SENSOR

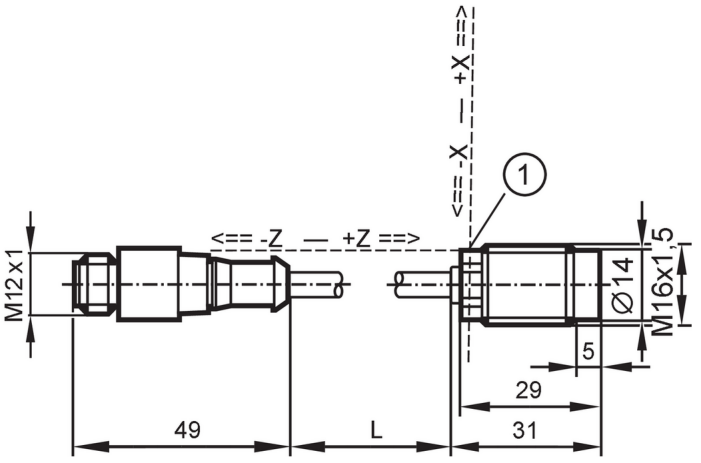

1 marking for X axis

Product characteristics		
Measuring range of vibration	[g]	-40...40
Frequency range	[Hz]	1...4500
Measuring principle		capacitive
Application		
Special feature		Drag chain suitability
Electrical data		
Bias voltage DC	[V]	13...16
Operating current	[mA]	4...10
Min. insulation resistance	[MΩ]	100; (500 V DC)
Protection class		III
Reverse polarity protection		yes
Sensor type		microelectromechanical system (MEMS)
Measuring/setting range		
Measuring range of vibration	[g]	-40...40
Frequency range	[Hz]	1...4500
Measuring principle		capacitive
Max. transverse sensitivity	[%]	5
Number of measurement axes		2
Accuracy / deviations		
Measuring sensitivity		100 mV/g
Linearity deviation	[% of the span]	2
Operating conditions		
Ambient temperature	[°C]	-30...85
Storage temperature	[°C]	-30...85
Protection		IP 67

VSM102

Accelerometer

VIBRATION SENSOR

Tests / approvals			
EMC		EN IEC 61000-6-2	
		EN IEC 61000-6-3	
Shock resistance		DIN EN 60068-2-27	50 g 11 ms
			500 g 1 ms
Vibration resistance		DIN EN 60068-2-6	20 g / 10...2000 Hz
MTTF	[years]	1233	
UL approval		Ta	≤ 75 °C
		Enclosure type	Type 1
		voltage supply	Limited Voltage/Current
		File number UL	E251902

Mechanical data			
Weight	[g]	79.7	
Type of mounting		M16 x 1,5	
Materials		housing: stainless steel (316L/1.4404)	
Tightening torque	[Nm]	8	
Drag chain suitability		yes	
Drag chain suitability		bending radius for flexible use	min. 10 x cable diameter
		bending radius for fixed installation	min. 4 x cable diameter

Remarks		
Pack quantity	1 pcs.	

Electrical connection

Cable: 0.6 m, PUR, Ø 4.9 mm; 4 x 0.14 mm²

Connector: 1 x M12; coding: A; Contacts: 4



1 IEPE X
2 IEPE Z
3 GND
4 test