DV1510

5-segment light tower with IO-Link control

LED-Tower-5/Std/Bracket+Buz

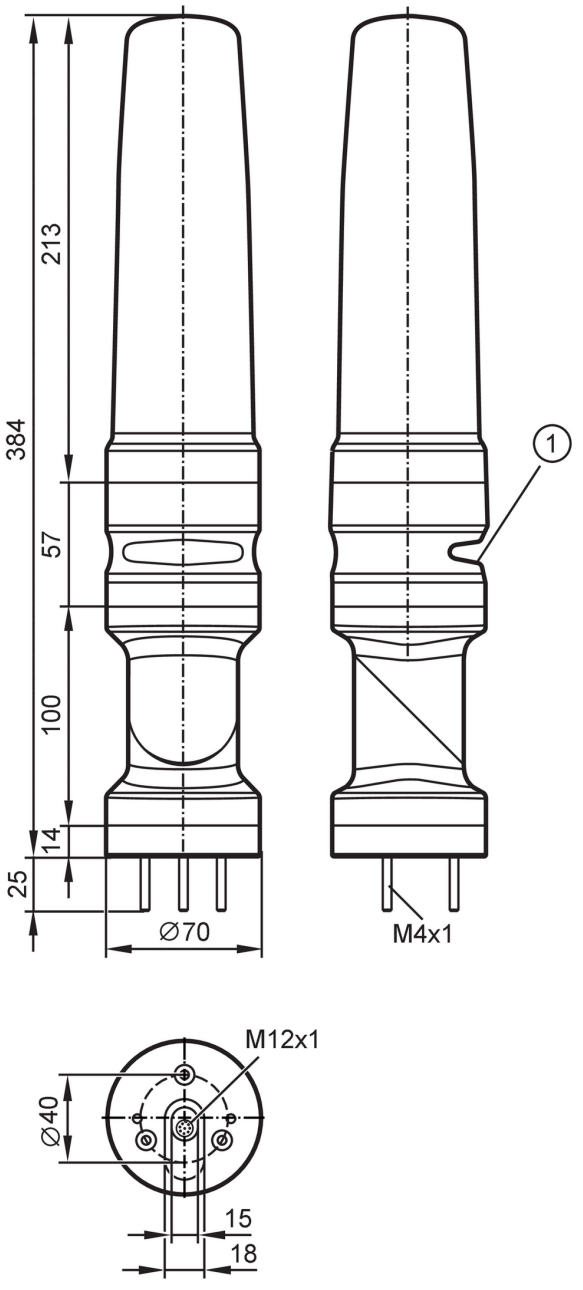

1 buzzer

IO-Link

Application	
Application	signalling machine conditions

Electrical data		
Operating voltage	[V]	18...30 DC; (to SELV/PELV)
Nominal voltage DC	[V]	24
Current consumption	[mA]	< 200

Inputs / outputs	
Number of inputs and outputs	Number of digital inputs: 6

DV1510

5-segment light tower with IO-Link control

LED-Tower-5/Std/Bracket+Buz

Inputs			
Number of digital inputs		6	
Input current High	[mA]	6	
Interfaces			
Communication interface		IO-Link	
Transmission type		COM2 (38,4 kBaud)	
IO-Link revision		1.1	
SDCI standard		IEC 61131-9	
SIO mode		yes	
Required master port type		A	
Min. process cycle time	[ms]	8	
Supported DeviceIDs		**Type of operation**	**DeviceID**
		Default	850
		Status B	1076
Operating conditions			
Ambient temperature	[°C]	-25...50	
Storage temperature	[°C]	-40...75	
Max. relative air humidity	[%]	90	
Air pressure	[kPa]	< 106	
Max. height above sea level	[m]	2000	
Protection		IP 54	
Tests / approvals			
MTTF	[years]	76	
Mechanical data			
Weight	[g]	647.5	
Type of mounting		mounting base	
Dimensions	[mm]	Ø 70 / L = 384	
Materials		housing: ABS; lens: PC	
Displays / operating elements			
Display		status	1 x LED, green
		LED segment	5 x 4 LED
Acoustic signal		buzzer	
Max. sound pressure	[dB]	85	
Accessories			
Accessories (optional)		mounting base, E89060	
		wall bracket, E89061	
		mounting adapter, E89063	
		bracket with lateral cable entry, E89064	
		mounting tube, E89065	
		mounting tube, E89066	
		mounting tube, E89067	
Remarks			
Remarks		For further information please see the operating instructions.	
Pack quantity		1 pcs.	

DV1510

5-segment light tower with IO-Link control

LED-Tower-5/Std/Bracket+Buz

Electrical connection - plug

Connector: M12; coding: A; Contacts: 8

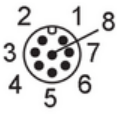

Connection	
1	digital input LED segment 5
2	buzzer
3	digital input LED segment 3
4	digital input LED segment 2
5	voltage supply
6	digital input LED segment 1
7	digital input LED segment 4
8	IO-Link (C/Q)

Diagrams and graphs

Installation

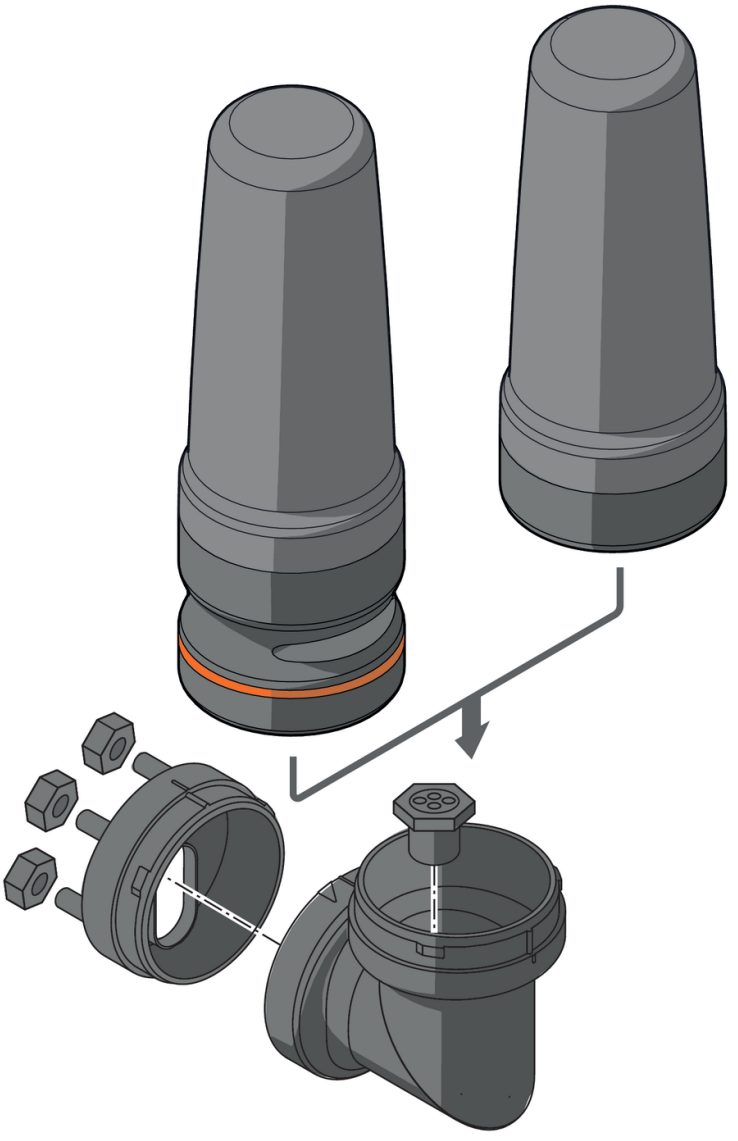

DV1510

5-segment light tower with IO-Link control

LED-Tower-5/Std/Bracket+Buz

Installation

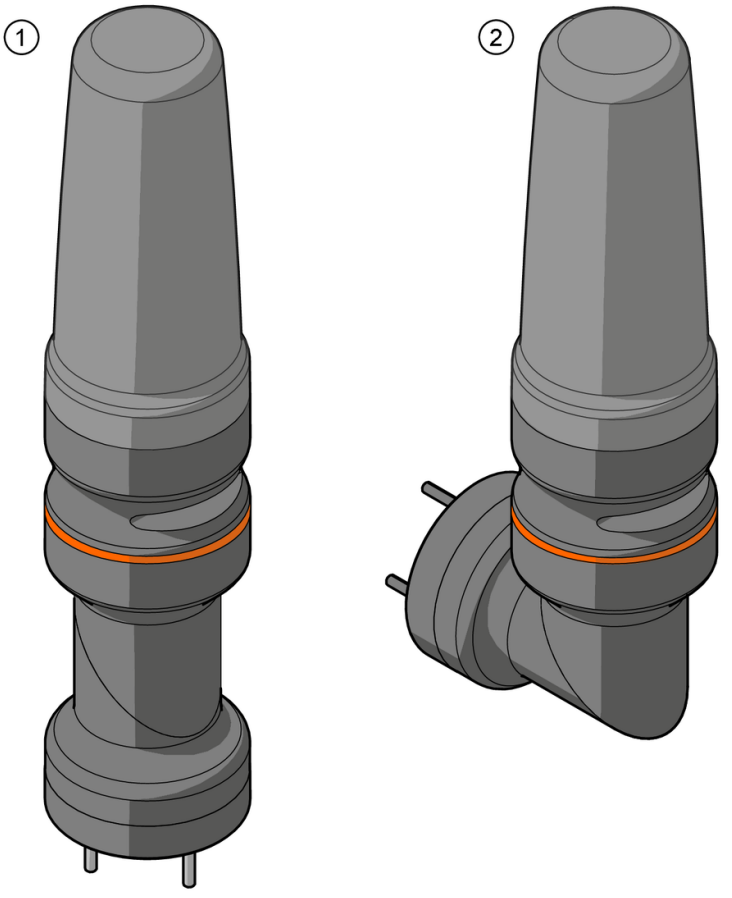

1 mounting on a horizontal surface

2 mounting on a vertical surface

DV1510

5-segment light tower with IO-Link control

LED-Tower-5/Std/Bracket+Buz

base mounting

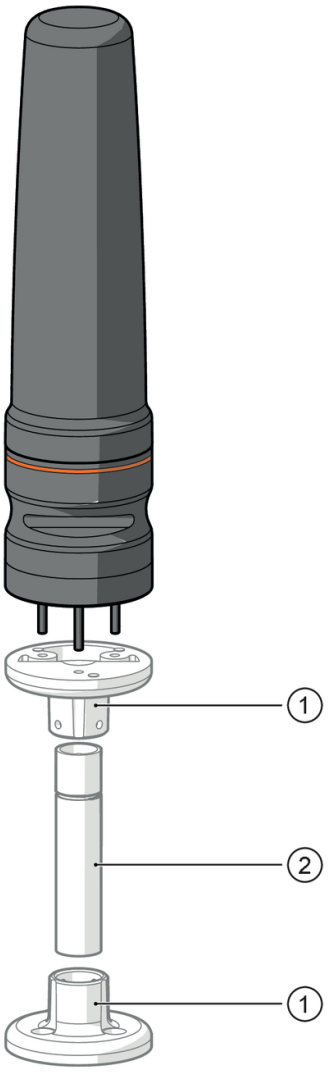

1 E89060 not supplied

2 E89065, E89066, E89067 not supplied

DV1510

5-segment light tower with IO-Link control

LED-Tower-5/Std/Bracket+Buz

wall mounting

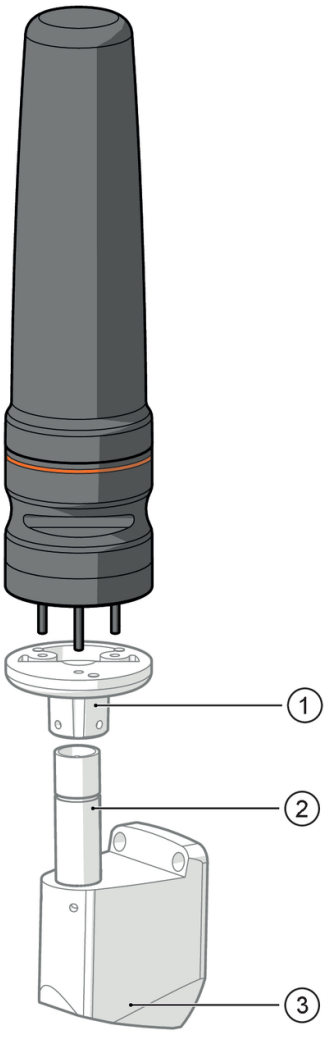

1 E89060 not supplied

2 E89065, E89066, E89067 not supplied

3 E89061 not supplied