# DV1300

## 3_Segment_Signalleuchte_mit_IO_Link_Ansteuerung

LED-Tower-3/Std/Bracket

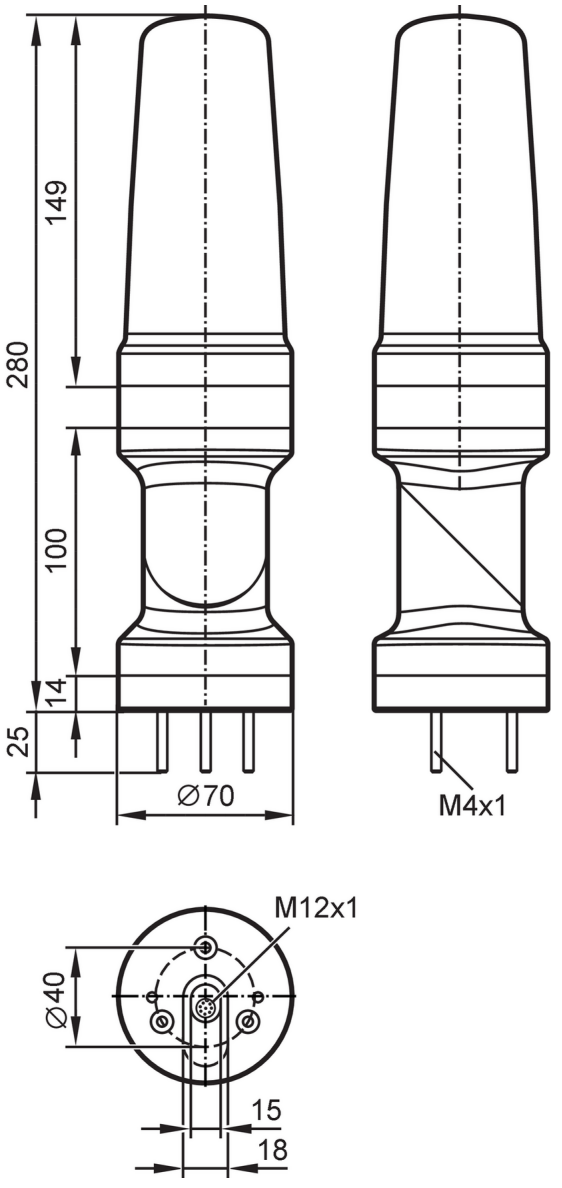


IO-Link

| | | |
|---|---|---|
| **Application** | | |
| Application | | signaling machine conditions |
| **Electrical data** | | |
| Operating voltage | [V] | 18...30 DC; (to SELV/PELV) |
| Nominal voltage DC | [V] | 24 |
| Current consumption | [mA] | < 200 |
| **Inputs / outputs** | | |
| Number of inputs and outputs | | Number of digital inputs: 4 |
| **Inputs** | | |
| Number of digital inputs | | 4 |
| Input current High | [mA] | 6 |

# DV1300

## 3_Segment_Signalleuchte_mit_IO_Link_Ansteuerung

LED-Tower-3/Std/Bracket

| Interfaces | | | |
|---|---|---|---|
| Communication interface | | IO-Link | |
| Transmission type | | COM2 (38,4 kBaud) | |
| IO-Link revision | | 1.1 | |
| SDCI standard | | IEC 61131-9 | |
| SIO mode | | yes | |
| Required master port class | | A | |
| Min. process cycle time | [ms] | 8 | |
| Supported DeviceIDs | | **Type of operation** | **DeviceID** |
| | | default | 1466 |

| Operating conditions | | |
|---|---|---|
| Ambient temperature | [°C] | -25...50 |
| Storage temperature | [°C] | -40...75 |
| Max. relative air humidity | [%] | 90 |
| Air pressure | [kPa] | < 106 |
| Max. height above sea level | [m] | 2000 |
| Protection | | IP 65 |

| Tests / approvals | | | |
|---|---|---|---|
| MTTF | [years] | 159 | |
| UL approval | | voltage supply | Class 2 |

| Mechanical data | | |
|---|---|---|
| Weight | [g] | 471.6 |
| Type of mounting | | Mounting base |
| Dimensions | [mm] | Ø 70 / L = 280 |
| Material | | housing: ABS; lens: PC |

| Displays / operating elements | | |
|---|---|---|
| Display | status | 1 x LED, green |
| | LED segment | 3 x 4 LED |

| Accessories | |
|---|---|
| Accessories (optional) | mounting base, E89060 |
| | wall bracket, E89061 |
| | Mounting adapter, E89063 |
| | bracket with lateral cable entry, E89064 |
| | mounting tube, E89065 |
| | mounting tube, E89066 |
| | mounting tube, E89067 |

| Remarks | |
|---|---|
| Remarks | Further information is available in the manual. |
| Pack quantity | 1 pcs. |

## Electrical connection - plug

Connector: M12; coding: A; Contacts: 8

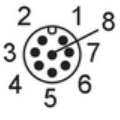

# DV1300

## 3_Segment_Signalleuchte_mit_IO_Link_Ansteuerung

LED-Tower-3/Std/Bracket

### Connection

| | |
|---|---|
| 1 | n.c. |
| 2 | n.c. |
| 3 | Digital input LED segment 3 |
| 4 | Digital input LED segment 2 |
| 5 | voltage supply |
| 6 | Digital input LED segment 1 |
| 7 | n.c. |
| 8 | IO-Link (C/Q) |

### Diagrams and graphs

Installation

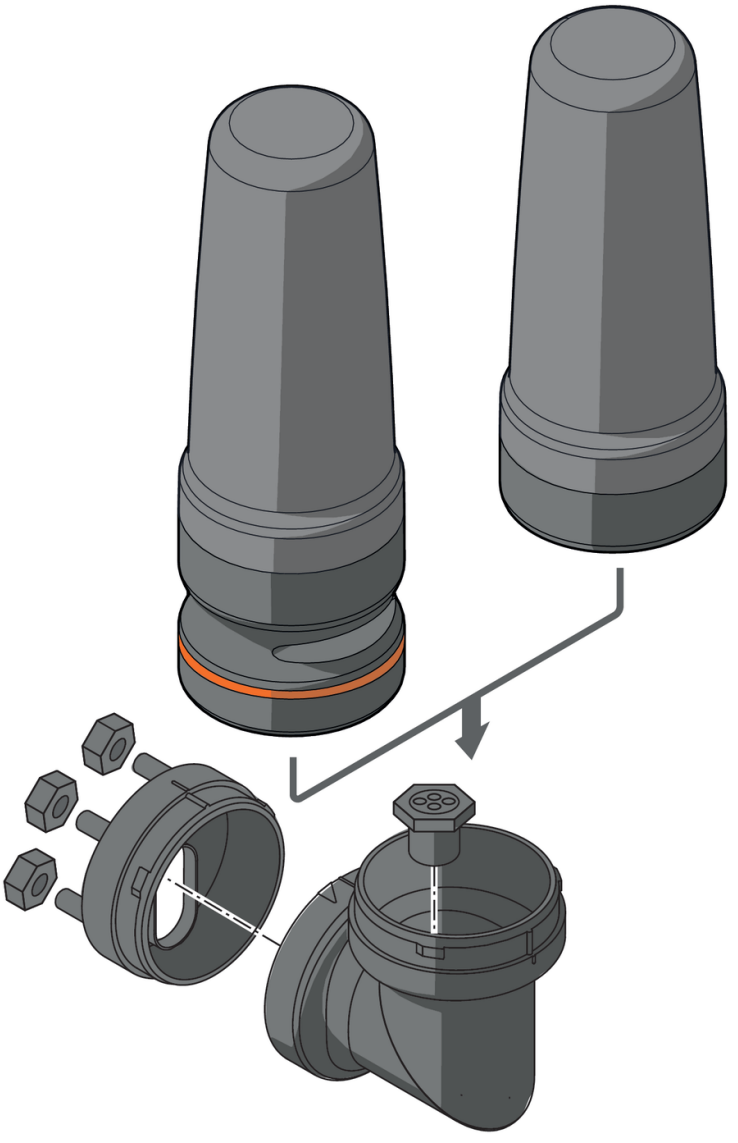

# DV1300

## 3_Segment_Signalleuchte_mit_IO_Link_Ansteuerung

**LED-Tower-3/Std/Bracket**

Installation

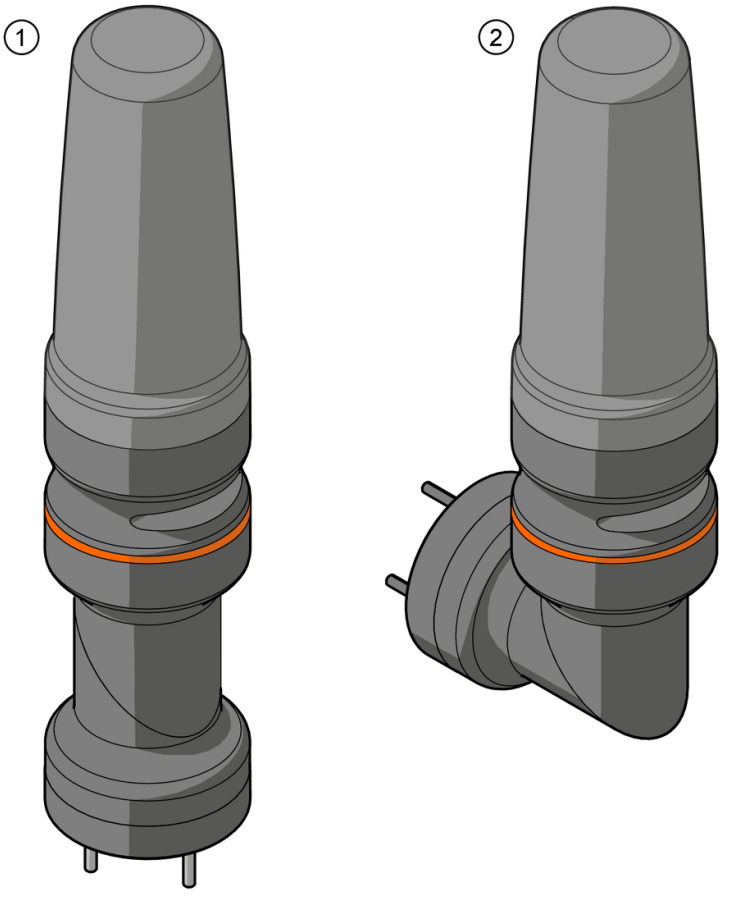


1 mounting on a horizontal surface

2 mounting on a vertical surface

# DV1300

## 3_Segment_Signalleuchte_mit_IO_Link_Ansteuerung

LED-Tower-3/Std/Bracket

base mounting

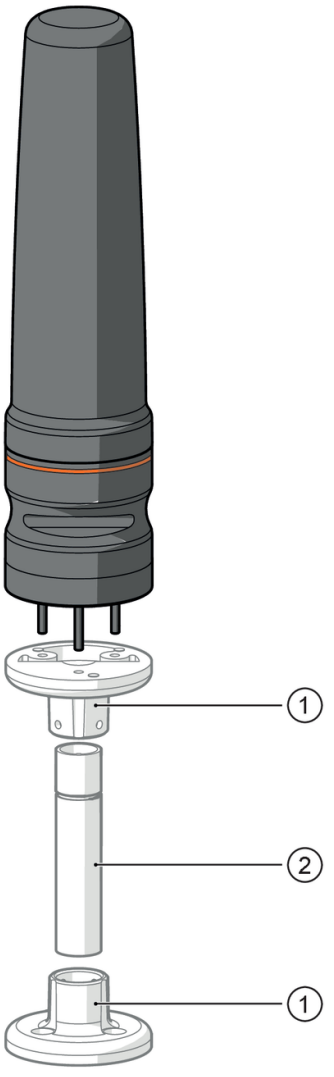


1 E89060 not supplied

2 E89065, E89066, E89067 not supplied

# DV1300

## 3_Segment_Signalleuchte_mit_IO_Link_Ansteuerung

**LED-Tower-3/Std/Bracket**

wall mounting

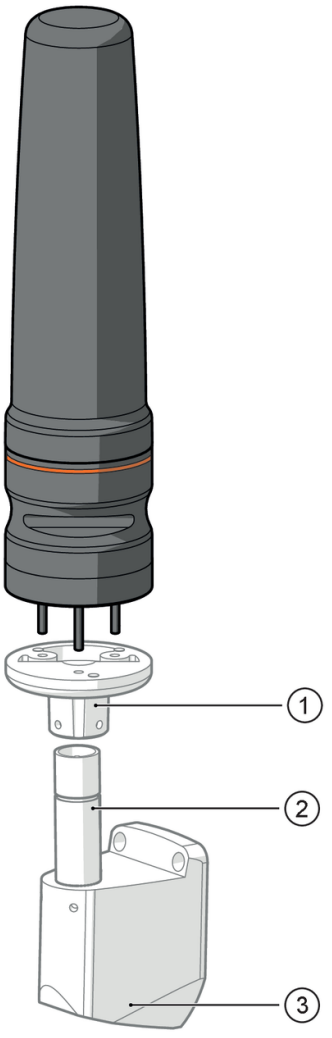


1 E89060 not supplied

2 E89065, E89066, E89067 not supplied

3 E89061 not supplied