# OVP812

## Video processing unit (VPU)

OVPAA/RO/E0/E1/TX2NX/4GB/PDS

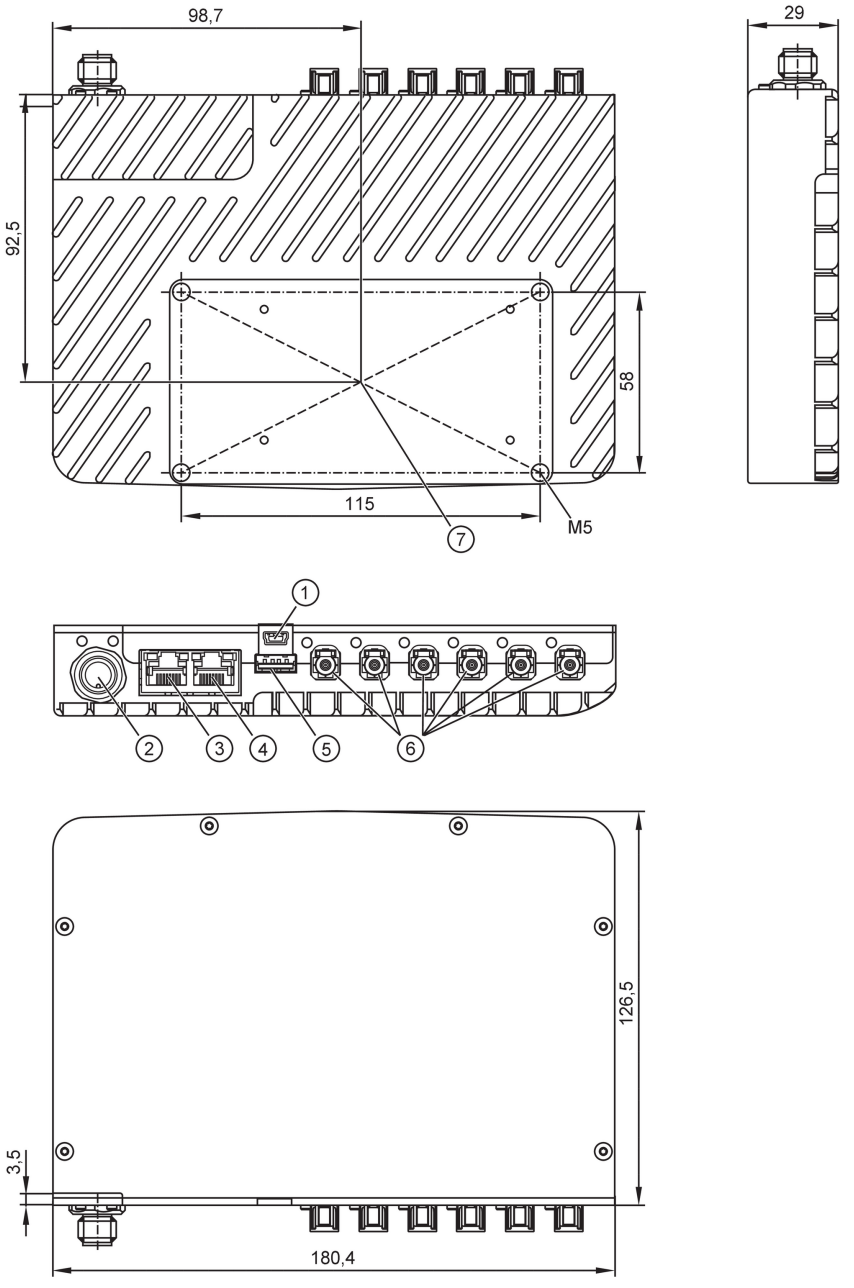


1 USB-C interface 3.2 (ifm internal interface)
2 voltage supply / CAN
3 Ethernet 0 RJ45
4 Ethernet 1 RJ45
5 USB interface 3.0
6 Connection cameras x 4 HFM
7 coordinate reference point (IMU)

| Application | |
|---|---|
| Application | PDS for fine positioning of pallets in source and sink.; includes pallet detection (GET PALLET), rack detection (GET RACK) and free space determination (VOL CHECK) |

| Electrical data | | |
|---|---|---|
| Operating voltage | [V] | 19.2...28.8 DC |
| Max. current consumption | [mA] | 710 |

# OVP812

## Video processing unit (VPU)

OVPAA/RO/E0/E1/TX2NX/4GB/PDS

| | | |
|---|---|---|
| Power consumption | [W] | 15.4; (Base value of the VPU. Increase the current/power consumption for each sensor head according to its data sheet. With 3 O3R222 cameras, at 20fps, the maximum current consumption of the system is 2270mA, the average power consumption is 35.8W.) |
| **Interfaces** | | |
| Number of CAN interfaces | | 1 |
| Number of Ethernet interfaces | | 2 |
| Number of USB interfaces | | 2 |
| CAN | | |
| Protocol | | free protocol |
| Ethernet-ETH0 | | |
| Transmission standard | | 1GBase-T |
| Transmission rate | | 1000 MBit/s |
| Type of connector | | RJ45 |
| Protocol | | TCP/IP |
| Factory settings | | IP address: 192.168.0.69 |
| | | subnet mask: 255.255.255.0 (Class C) |
| | | gateway IP address: 192.168.0.201 |
| | | MAC address: see type label |
| Ethernet-ETH1 | | |
| Transmission standard | | 1GBase-T |
| Transmission rate | | 1000 MBit/s |
| Type of connector | | RJ45 |
| Protocol | | TCP/IP |
| Factory settings | | IP address: 192.168.42.69 |
| | | subnet mask: 255.255.255.0 (Class C) |
| | | gateway IP address: 0.0.0.0 |
| | | MAC address: see type label |
| Sensor interface | | |
| Transmission standard | | FPD-Link |
| Type of connector | | HFM (Mini-FAKRA) |
| Note on interfaces | | number of cameras when using the PDS function (Pick and Drop System): see operating instructions |
| USB | | |
| Type of connector | | Mini-USB; type A |
| Version | | 2.0; 3.0 |
| **Operating conditions** | | |
| Ambient temperature | [°C] | -10...40 |
| Storage temperature | [°C] | -40...85 |
| Protection | | IP 50 |

| | | |
|---|---|---|
| **Tests / approvals** | | |
| EMC | EN IEC 61000-6-4 | radiation of interference / industrial environments |
| | EN IEC 61000-6-2 | noise immunity / industrial environments |
| Shock resistance | DIN EN 60068-2-27 | 50 g / (11 ms) not repetitive |
| | DIN EN 60068-2-27 | 40 g / (6 ms) repetitive |

# OVP812

## Video processing unit (VPU)

OVPAA/RO/E0/E1/TX2NX/4GB/PDS

| | | | |
|---|---|---|---|
| Vibration resistance | | DIN EN 60068-2-6 | 2 g / (10...150 Hz) |
| | | DIN EN 60068-2-64 | 2.3 g RMS / (10...500 Hz) |
| Electrical safety | | DIN EN 61010-2-201 | electrical supply only via PELV circuits |

### Mechanical data

| | | |
|---|---|---|
| Weight | [g] | 1292.5 |
| Dimensions | [mm] | 126.5 x 29 x 180.4 |
| Material | | housing: aluminum |
| Tightening torque | [Nm] | < 5.5 |

### Hardware

| | |
|---|---|
| Processor | SOM: NVIDIA Jetson TX2NX 4GB Module<br>CPU: Dual-Core NVIDIA Denver 2 64-Bit CPU and<br>Quad-Core Arm® Cortex®-A57 MPCore processor;<br>GPU: 256-core NVIDIA Pascal™ architecture GPU |
| Working memory | 4GB 128-bit LPDDR4, 1600 MHz - 51.2 GB/s |
| Mass storage | 32GB eMMC 5.1 Flash (16GB for docker) |

### Remarks

| | |
|---|---|
| Pack quantity | 1 pcs. |

### Electrical connection - Ethernet Connection

Connector: RJ45; Contacts: 8

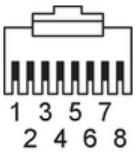


| | |
|---|---|
| 1 | TX + |
| 2 | TX - |
| 3 | RX + |
| 4 | not used |
| 5 | not used |
| 6 | RX - |
| 7 | not used |
| 8 | not used |

### Electrical connection - USB socket

Connector: 1 x mini USB interface

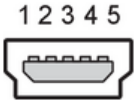


### Electrical connection - USB socket Typ A

Connector: 1 x Typ A

### Electrical connection - sensor interface

Connector: 6 x HFM (Mini-FAKRA) (AMK12A-1M4Z5-A)

# OVP812

## Video processing unit (VPU)

OVPAA/RO/E0/E1/TX2NX/4GB/PDS

## Electrical connection - voltage supply / CAN

Connector: 1 x M12; coding: A; Contacts: 5

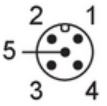


| | |
|---|---|
| 1 | screen |
| 2 | 24 V |
| 3 | GND |
| 4 | CAN + |
| 5 | CAN - |

## Other data

**Connection**

| | Port 0 | Port 1 | Port 2 | Port 3 | Port 4 | Port 5 |
|---|---|---|---|---|---|---|
| example 1 | camera 1 (3D-38k) | camera 2 (3D-38k) | camera 1 (2D) | camera 2 (2D) | camera 3 (3D-38k) | - |
| example 2 | camera 1 (2D) | camera 2 (2D) | camera 1 (3D-38k) | camera 2 (3D-38k) | camera 3 (2D) | camera 4 (2D) |
| example 3 | camera 1 (3D-38k) | camera 2 (3D-38k) | - | camera 4 (3D-VGA) | - | - |
| example 4 | camera 1 (3D-VGA) | camera 2 (3D-VGA) | camera 3 (3D-VGA) | camera 4 (3D-VGA) | - | - |

ports 0 and 1, 2 and 3, 4 and 5 must be assigned to the same type of image sensor.

please note the different 3D image sensor types 38k and VGA when connecting the cameras.

remarks: Further information on the free memory required for specific applications can be found in the firmware-specific version information (https://ifm.3d.com/).

**typical application characteristics for PDS**

| Function | camera heads | Operating distance | max. repetition rate | max. angle of approach YAW | max. angle of approach ROLL |
|---|---|---|---|---|---|
| Get Pallet | O3R222 60° | ≤ 4.0m | 4 Hz | 23° | 4.6° |
| Get Rack | O3R222 60° | ≤ 2.0m | n/a | 11.5° | 11.5° |
| Vol Check | O3R222 60° | ≤ 4.0m | 4 Hz | 11.5° | 14° |