VSE953

Diagnostic electronics for vibration sensors

DIAGNOSTIC ELECTRONICS

phase-out article

Discontinuation date: 03/31/2027

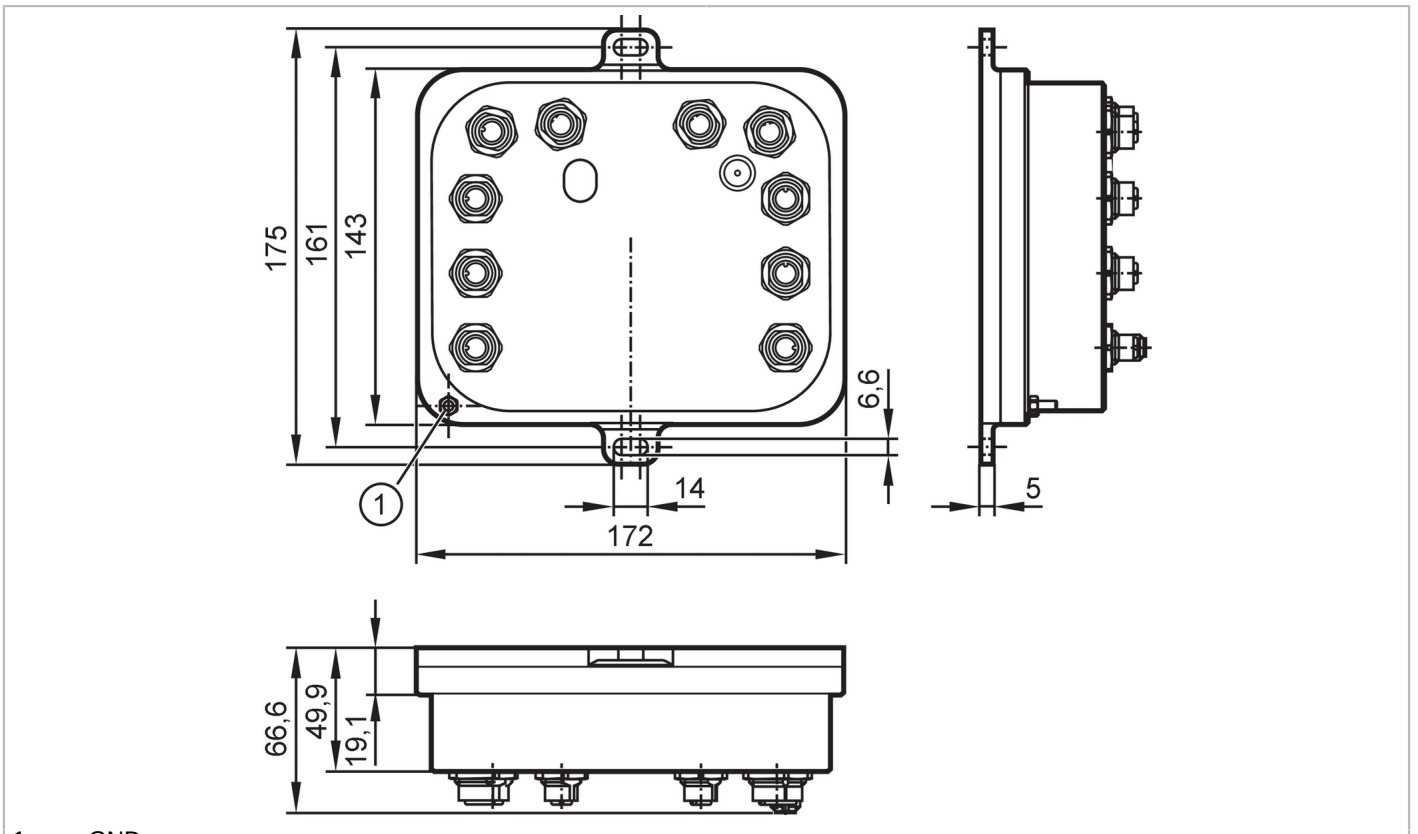

1 GND

Product characteristics		
Communication interface		Ethernet
Application		
Design		parameter setting via PC software VES004
Application		continuous vibration monitoring
Electrical data		
Operating voltage tolerance	[%]	20
Operating voltage	[V]	24 DC; (when using the IEPE input: 24 V + 20% IEPE = Integrated Electronics Piezo Electric)
Current consumption	[mA]	200; ((24 V DC))
Protection class		III
Inputs / outputs		
Total number of inputs and outputs		8; (parameterisable)
Inputs		
Total number of inputs		6
Dynamic inputs		
Number		4
Connection		S1...S4

VSE953

Diagnostic electronics for vibration sensors

DIAGNOSTIC ELECTRONICS

Analogue input	function type	Current, dynamic
	input range	0...10 mA / IEPE / 4...20 mA
	input frequency [Hz]	0,1...12000
	Resolution	16 bit
	sampling rate	100 kSamples
Process value inputs, analogue / digital		
Number	2	
Connection	IN1 (pulse), IN2 (Current)	
Digital input	function type	pulse
	Circuit	HTL
	frequency [Hz]	0,1...100000
Analogue input	function type	Current
	input range [mA]	4...20
	Resolution	12 bit
Outputs		
Max. load [Ω]	500	
Short-circuit protection	yes	
Type of short-circuit protection	pulsed	
Overload protection	yes	
Multi-function outputs, analogue / digital		
Number	1	
Connection	OU1/Supply	
Digital output	Electrical design	PNP
	Output function	normally open / normally closed (configurable)
Analogue output	function type	Current
	output range [mA]	4...20
Digital outputs		
Number	1	
Connection	OU2	
Digital output	Electrical design	PNP
	Output function	normally open / normally closed (configurable)
Interfaces		
Communication interface	Ethernet	
Number of Ethernet interfaces	1	
Ethernet Config		
Transmission standard	10Base-T; 100Base-TX	
Transmission rate	10/100 MBit/s	
Connector type	M12	
Protocol	TCP/IP	
Factory settings	IP address: 192.168.0.1	
Modbus IE1;IE2		
Transmission standard	100Base-TX	
Transmission rate	100 MBit/s	

VSE953

Diagnostic electronics for vibration sensors

DIAGNOSTIC ELECTRONICS

Connector type			M12
Protocol			Modbus TCP
Factory settings			IP address: 0.0.0.0
			subnet mask: 0.0.0.0
			gateway IP address: 0.0.0.0
			MAC address: see type label
Note on interfaces			CC-C (Conformance Class C) (IRT switch)
			Netload Class III
			SNMP (Simple Network Management Protocol)
			MRP (Media Redundancy Protocol)
			supported network topologies: line
			ring
Operating conditions			
Ambient temperature	[°C]		0...60
Storage temperature	[°C]		0...60
Protection			IP 67
Tests / approvals			
EMC		EN 61000-4-2 ESD	4 kV contact discharge / 15 kV air discharge
		EN 61000-4-3	10 V/m (80...2700 MHz)
		EN 61000-4-4 Burst	4 kV capacitive coupling probe, earthed
		EN 61000-4-6	10 V 0,15...80 MHz
		EN 61000-6-4	industrial environments
Mechanical data			
Weight	[g]		1369.5
Housing			rectangular
Type of mounting			backplane mounting
Dimensions	[mm]		175 x 172 x 66.6
Materials			housing: aluminium alloy black anodised EN AW-5083
Data memories			
History memory			yes
Data memory buffered			yes
Data memory type			ring memory; FIFO
Real-time clock			yes
Memory location			internal
Memory interval			min. 1 min
Memory size			881664 data records
Accessories			
Accessories (optional)			cross-over Ethernet patch cable for the direct connection to the PC
Remarks			
Pack quantity			1 pcs.

VSE953

Diagnostic electronics for vibration sensors

DIAGNOSTIC ELECTRONICS

Electrical connection - Sensor 1...4

Connector: 4 x M12; coding: A; Contacts: 4

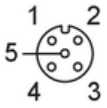

1 L+
2 Signal
3 GND
4 Test

Electrical connection - Config / IE1 / IE2

Connector: 3 x M12; coding: D; Contacts: 4



1 TxD+
2 RxD+
3 TxD-
4 RxD-

Electrical connection - IN 1

Connector: 1 x M12; coding: A; Contacts: 3; Maximum cable length: 30 m

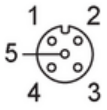

1 24 V DC
2 -
3 GND
4 IN 1 (pulses)

Electrical connection - IN 2

Connector: 1 x M12; coding: A; Contacts: 3; Maximum cable length: 30 m

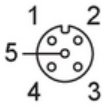

1 24 V DC
2 IN 2 (4..20mA)
3 GND
4 -

Electrical connection - OU / Supply

Connector: 1 x M12; coding: A; Contacts: 4

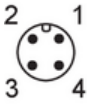

1 24 V DC
2 analogue / digital
3 GND
4 OU2: switch