VSP02A

Accelerometer

VIBRATION SENSOR ATEX

Article no longer available - archive entry

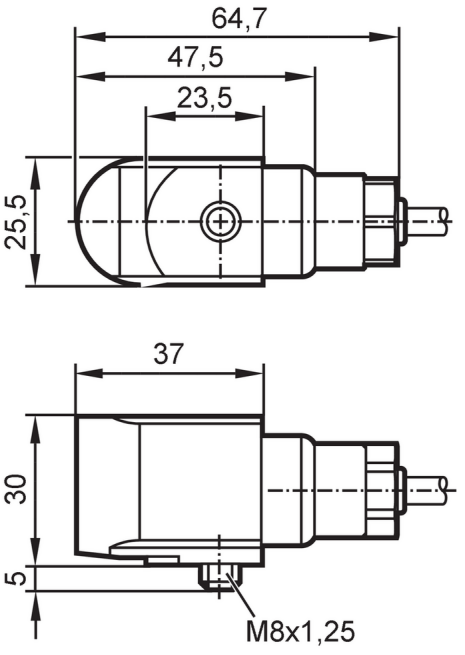

Product characteristics		
Measuring range of vibration	[g]	-50...50
Frequency range	[Hz]	2...10000
Measuring principle		piezoelectric
Application		
Design		for connection to external diagnostic electronics VSExxx
Electrical data		
Switching amplifiers		connection to intrinsically safe supply isolators (Ex ia)
Operating voltage	[V]	10...12 DC
Current consumption	[mA]	0.5...8
Protection class		III
Reverse polarity protection		yes
Outputs		
Max. load	[Ω]	200
Short-circuit protection		yes
Overload protection		yes
Measuring/setting range		
Measuring range of vibration	[g]	-50...50
Frequency range	[Hz]	2...10000
Measuring principle		piezoelectric
Sensitivity	[mV/g]	100
Noise density	[mg]	0.1
Max. transverse sensitivity	[%]	5

VSP02A

Accelerometer

VIBRATION SENSOR ATEX

Minimum measuring time	[s]	2
Number of measurement axes		1
Operating conditions		
Ambient temperature	[°C]	-55...90
Storage temperature	[°C]	-55...90
Protection		IP 68; (1D application: IP 65)
Tests / approvals		
Approval		Baseefa12ATEX0247; IECEx BAS 12.0132
ATEX marking		I M1 Ex ia I Ma (-55°C < Ta < +90°C)
EMC		EN 61000-6-2
		EN 61000-6-4
Shock resistance		5000 g
Mechanical data		
Weight	[g]	669
Type of mounting		M8 x 1,25
Dimensions	[mm]	30 x 25.5 x 64.7
Materials		housing: stainless steel
Tightening torque	[Nm]	8
Accessories		
Accessories (optional)		Safety barrier, ZB0633
Remarks		
Pack quantity		1 pcs.
Electrical connection		

Cable: 10 m, PUR

white	IEPE +
black	IEPE -
screen	drain wire