EBF012

Y-splitter

ZDO2F030VAS0000-00STGH040VAS

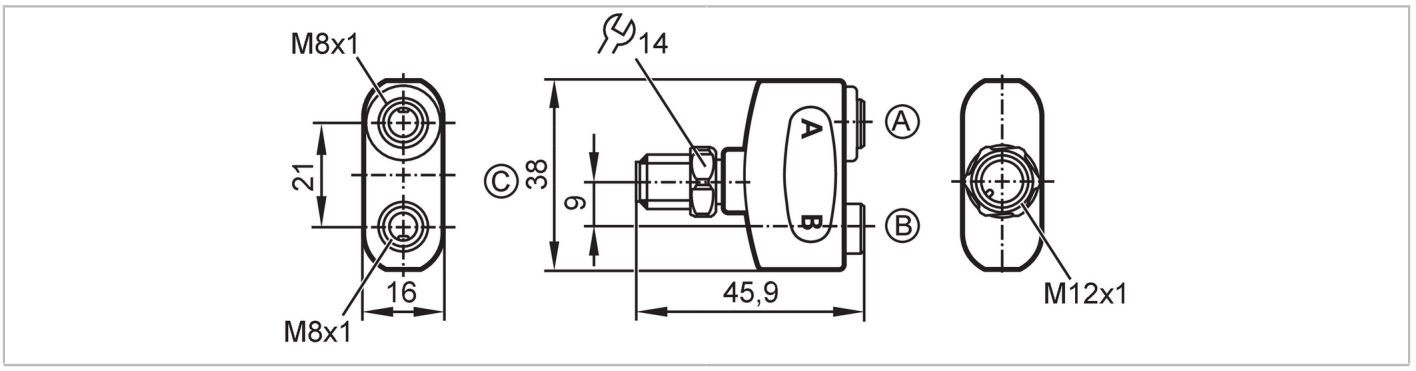

Application		
Special feature		Free from silicone; Gold-plated contacts
Application		hygienic and wet areas in the food industry
Free from silicone		yes
Electrical data		
Operating voltage	[V]	< 50 AC / < 60 DC; (cULus: 30 AC / 42 DC)
Protection class		III
Max. current load total	[A]	3
Operating conditions		
Ambient temperature	[°C]	-25...80
Note on ambient temperature		cULus: ...65 °C
Protection		IP 65; IP 67; IP 68; IP 69K
Tests / approvals		
UL approval	voltage supply	Class 2
	File number UL	E191684
Mechanical data		
Weight	[g]	28.7
Materials		housing: PA grey; Halogen-free
Material nut		stainless steel (316L/1.4404)
Sealing material		EPDM
Remarks		
Pack quantity		1 pcs.

Electrical connection

, PUR; flame-retardant (IEC 60332-2, UL: FT2)

Electrical connection - plug

Connector: 1 x M12; coding: A; Contacts: 4, gold-plated; Locking: stainless steel (316L/1.4404); Tightening torque: 0.6...1.5 Nm; Take into account the maximum value of the counterpart!



EBF012

Y-splitter

ZDO2F030VAS0000-00STGH040VAS

Electrical connection

Connection

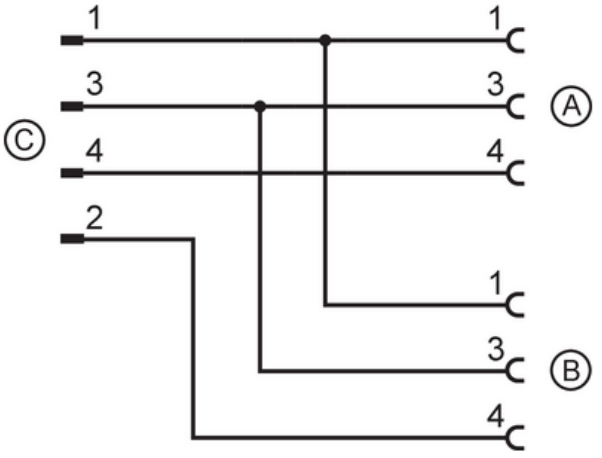

Electrical connection - socket

Connector: 2 x M8; coding: A; Contacts: 3, gold-plated; Locking: stainless steel (316L/1.4404); Sealing: EPDM; Tightening torque: 0.3...0.5 Nm

