AE2400

EdgeGateway for connecting the production environment to the IIoT platform moneo

IIoT edgeGateway IP67

an additional QCM100/QCM110 cloud subscription is required to use and operate the moneo Cloud

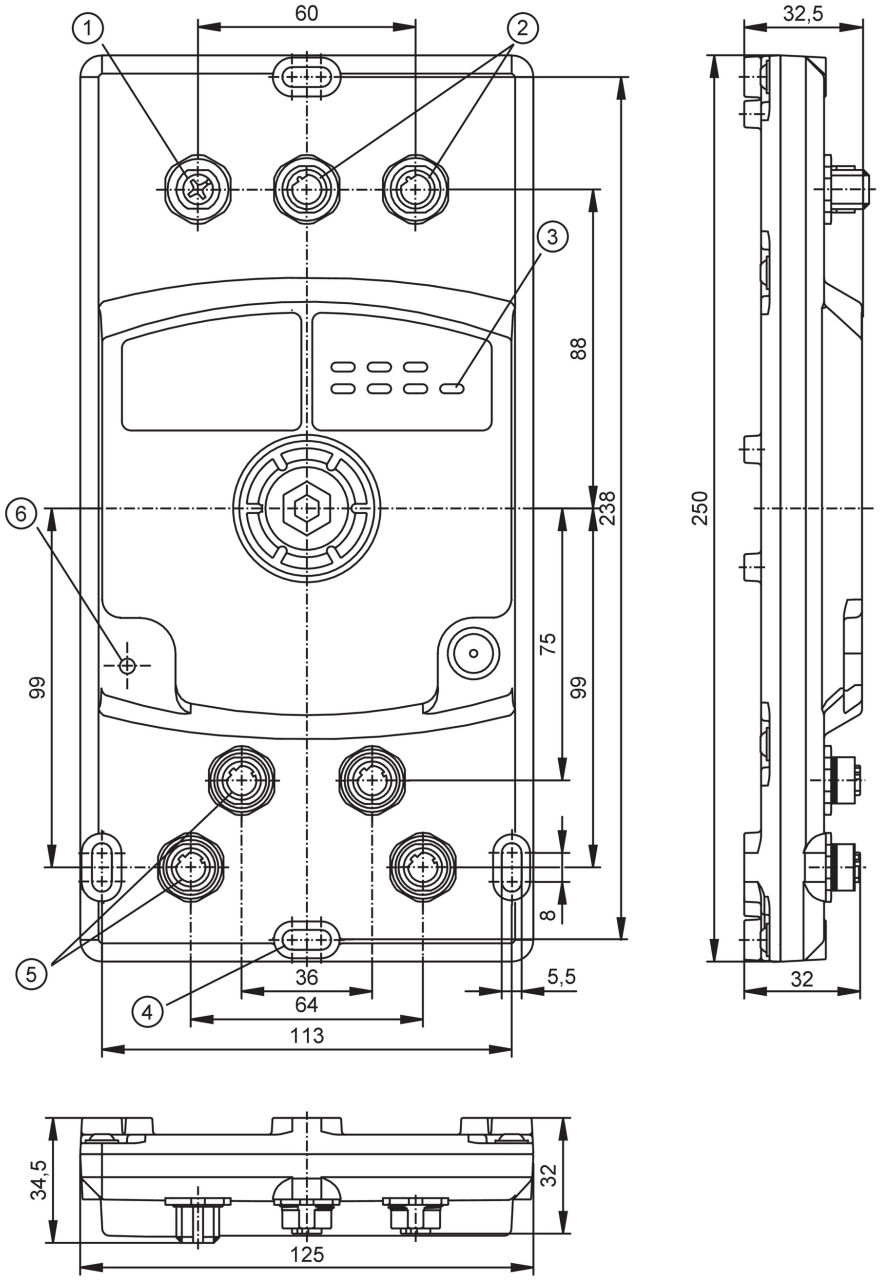

1 voltage supply
2 USB interface
3 LEDs
4 mounting hole
5 Ethernet interface
6 functional earth

Product characteristics	
Communication interface	Ethernet; USB
Housing	rectangular
Dimensions [mm]	250 x 125 x 32.5

AE2400

EdgeGateway for connecting the production environment to the IIoT platform moneo

IIoT edgeGateway IP67

Application		
Application		ideally suited for operation in harsh environments to collect data from industrial environments and to improve operational efficiency, productivity and safety; to increase machine availability, ensure process quality or optimise energy consumption in industrial applications
Electrical data		
Operating voltage	[V]	8...32 DC; (to PELV)
Nominal voltage DC	[V]	12 / 24
Power consumption	[W]	14; (max. power for USB devices: 1,5 A / 5 V)
Reverse polarity protection		yes
Overvoltage category		II
Software / programming		
Parameter setting options		moneo
Interfaces		
Communication interface		Ethernet; USB
Number of Ethernet interfaces		4
Number of USB interfaces		2
Ethernet		
Transmission standard		10Base-T; 100Base-TX
Transmission rate		10 MBit/s; 100 MBit/s
Type of connector		M12
Protocol		TCP/IP; TCP/IP JSON; UDP; HTTP; OPC UA; MQTT
USB		
Transmission rate		< 480 MBit/s
Type of connector		M12
Version		USB 2.0
Note on interfaces		Output current limitation: 1,5 A
		Output current total: 1,5 A
Operating conditions		
Ambient temperature	[°C]	-25...55
Storage temperature	[°C]	-25...85
Max. relative air humidity	[%]	90; (non condensing)
Max. height above sea level	[m]	3000
Protection		IP 65; IP 67
Pollution degree		2
Tests / approvals		
EMC		EN IEC 61000-6-2
		EN IEC 61000-6-8
Mechanical data		
Weight	[g]	1057
Housing		rectangular
Type of mounting		Backplane mounting
Dimensions	[mm]	250 x 125 x 32.5

AE2400

EdgeGateway for connecting the production environment to the IIoT platform moneo

IIoT edgeGateway IP67

Material	housing: diecast aluminium powder-coated	

Displays / operating elements

Display	system status	3 LED, three-color
	network status	4 LED, green
		4 LED, yellow

Hardware

Processor	ARM 64 Bit Quad Core 1,2 GHz
Working memory	4 GByte RAM
Mass storage	20 GByte Flash
Removable storage	USB interface

Data memory

Real-time clock	yes; UTC, battery buffered

Remarks

Remarks	maximum transmission rate of 500 process values per second
Notes	an additional QCM100/QCM110 cloud subscription is required to use and operate the moneo Cloud
Pack quantity	1 pcs.

Electrical connection - Ethernet

Connector: 4 x M12; coding: D; Contacts: 4

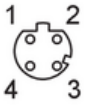

1	DATA	TX +
2	DATA	RX+
3	DATA	TX -
4	DATA	RX -

Electrical connection - voltage supply

Connector: 1 x M12; coding: A; Contacts: 5

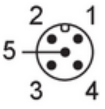

1	L+	(+24 V)
2	L+	(+12 V / +24 V)
3	L-	
4	n.c.	
5	n.c.	

Electrical connection - USB

Connector: 2 x M12; coding: B; Contacts: 4

1	L+
2	DATA -
3	DATA +
4	n.c.
5	L-