LDH112

Oil humidity sensor

OIL HUMIDITY SENSOR IO-LINK

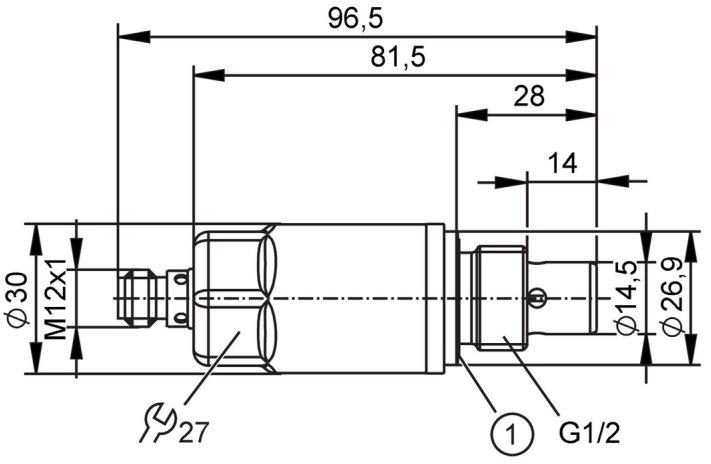

1 Sealing

Product characteristics			
Number of inputs and outputs		Number of digital outputs: 1	
Process connection		threaded connection G 1/2	
Application			
Special feature		Gold-plated contacts	
Media		mineral oils; synthetic esters; biodegradable oils	
Cannot be used for		See operating instructions, chapter "Intended use".	
Medium temperature	[°C]	-40...120	
Pressure rating		50 bar	5 MPa
Vacuum resistance	[mbar]	-1000	
MAWP for applications according to CRN	[MPa]	5	
Electrical data			
Operating voltage	[V]	18...30 DC	
Current consumption	[mA]	< 50	
Protection class		III	
Reverse polarity protection		yes	
Power-on delay time	[s]	2	
Max. current load total	[A]	0.065	
Inputs / outputs			
Number of inputs and outputs		Number of digital outputs: 1	
Outputs			
Total number of outputs		1	
Output signal		IO-Link	
Number of digital outputs		1	
Measuring/setting range			
Measuring range	[% RH]	0...100	
Temperature measurement			
Measuring range	[°C]	-40...120	

LDH112

Oil humidity sensor

OIL HUMIDITY SENSOR IO-LINK

Accuracy / deviations			
Accuracy		± 3; (± 5 % in the range < 10 %, > 90 %)	
Repeatability		± 0,5 %	
Resolution	[%]	0,1; (process value)	
Temperature measurement			
Accuracy	[K]	± 1	
Repeatability	[K]	± 0,5	
Resolution	[K]	0.1	
Response times			
Response time	[s]	oil: T09 < 30	
Temperature measurement			
Response time	[s]	oil: T09 < 30	
Interfaces			
Communication interface		IO-Link	
Transmission type		COM2 (38,4 kBaud)	
IO-Link revision		1.1	
SDCI standard		IEC 61131-9	
Profiles		Common - I&D	Identification and Diagnosis
		Function	Measurement data, standard resolution
SIO mode		no	
Required master port type		A	
Process data analogue		5	
Min. process cycle time	[ms]	4.5	
Supported DeviceIDs		**Type of operation**	**DeviceID**
		default	1249
Operating conditions			
Ambient temperature	[°C]	-40...85	
Storage temperature	[°C]	-40...85	
Max. relative air humidity	[%]	100	
Protection		IP 68; IP 69K; (7 days / 3 m water depth / 0.3 bar: IP 68)	
Tests / approvals			
EMC		DIN EN 61000-6-2	
		DIN EN 61000-6-4	
Shock resistance		DIN EN 60068-2-27	50 g (11 ms)
Vibration resistance		DIN EN 60068-2-6	20 g (10...2000 Hz)
MTTF	[years]	284	
UL approval		File number UL	E364788
Pressure Equipment Directive		Sound engineering practice; can be used for group 2 fluids; group 1 fluids on request	
Mechanical data			
Weight	[g]	119.55	
Materials		stainless steel (316L/1.4404); PEI; Sealing: FKM	
Materials (wetted parts)		stainless steel (316L/1.4404); PA6 GF50; epoxy resin; Sealing: NBR	
Process connection		threaded connection G 1/2	

LDH112

Oil humidity sensor

OIL HUMIDITY SENSOR IO-LINK

Remarks	
Remarks	accuracy values expressed in percent refer to the measuring span
Pack quantity	1 pcs.

Electrical connection

Connector: 1 x M12 (EN 61067-2-101); coding: A; Contacts: 4, gold-plated



Connection

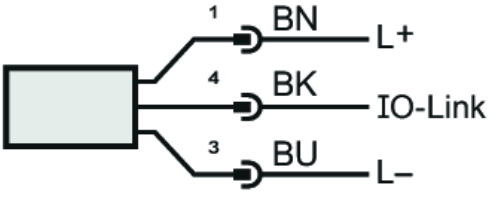

	colours to DIN EN 60947-5-2
BK=	black
BN=	brown
BU=	blue