DV2330

3_Segment_Signalleuchte_mit_IO_Link_Ansteuerung

LED-Tower-3/IOL/Buzzer

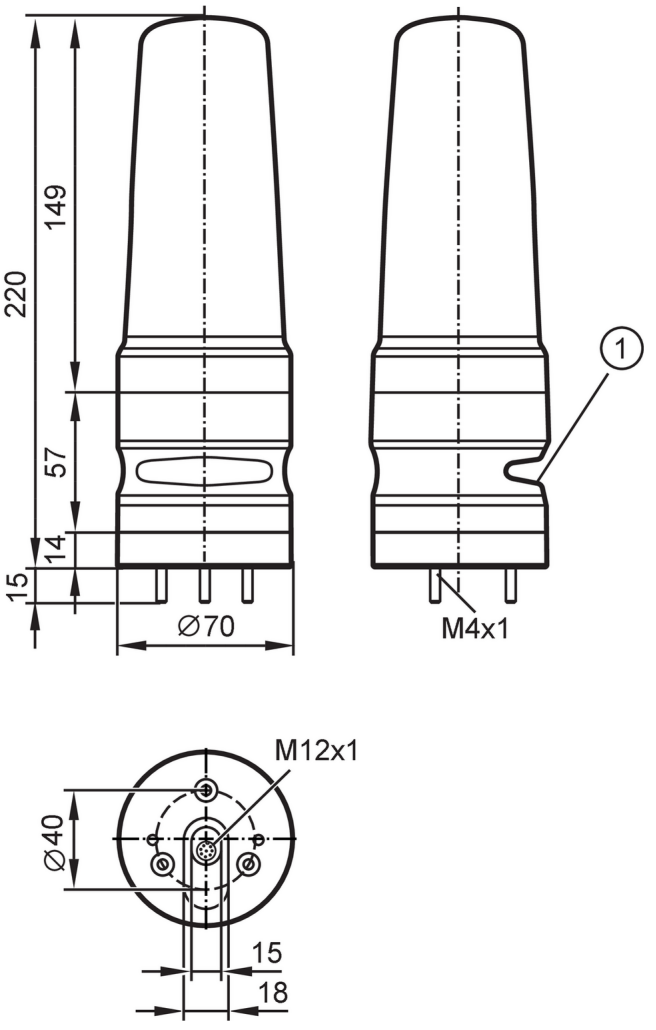

1 buzzer

Application		
Application		signaling machine conditions
Electrical data		
Operating voltage	[V]	18...30 DC; (to SELV/PELV)
Nominal voltage DC	[V]	24
Current consumption	[mA]	< 200
Inputs		
Input current High	[mA]	6
Interfaces		
Communication interface		IO-Link
Transmission type		COM2 (38,4 kBaud)
IO-Link revision		1.1
SDCI standard		IEC 61131-9
SIO mode		yes
Required master port class		A

DV2330

3_Segment_Signalleuchte_mit_IO_Link_Ansteuerung

LED-Tower-3/IOL/Buzzer

Min. process cycle time	[ms]	8	
Supported DeviceIDs		**Type of operation**	**DeviceID**
		default	1467

Operating conditions

Ambient temperature	[°C]	-25...50
Storage temperature	[°C]	-40...75
Max. relative air humidity	[%]	90
Air pressure	[kPa]	< 106
Max. height above sea level	[m]	2000
Protection		IP 54

Tests / approvals

MTTF	[years]	343	
UL approval		voltage supply	Class 2

Mechanical data

Weight	[g]	422.8
Dimensions	[mm]	Ø 70 / L = 220
Material		housing: ABS; lens: PC

Displays / operating elements

Display		LED segment	3 x 4 LED
Acoustic signal		buzzer	
Max. sound pressure	[dB]	85	

Accessories

Accessories (optional)	mounting base, E89060
	wall bracket, E89061
	Mounting adapter, E89063
	bracket with lateral cable entry, E89064
	mounting tube, E89065
	mounting tube, E89066
	mounting tube, E89067

Remarks

Remarks	Further information is available in the manual.
Pack quantity	1 pcs.

Electrical connection - plug

Connector: M12; coding: A; Contacts: 4

1	L+
2	not used
3	L-
4	IO-Link (C/Q)

DV2330

3_Segment_Signalleuchte_mit_IO_Link_Ansteuerung

LED-Tower-3/IOL/Buzzer

Diagrams and graphs

Installation

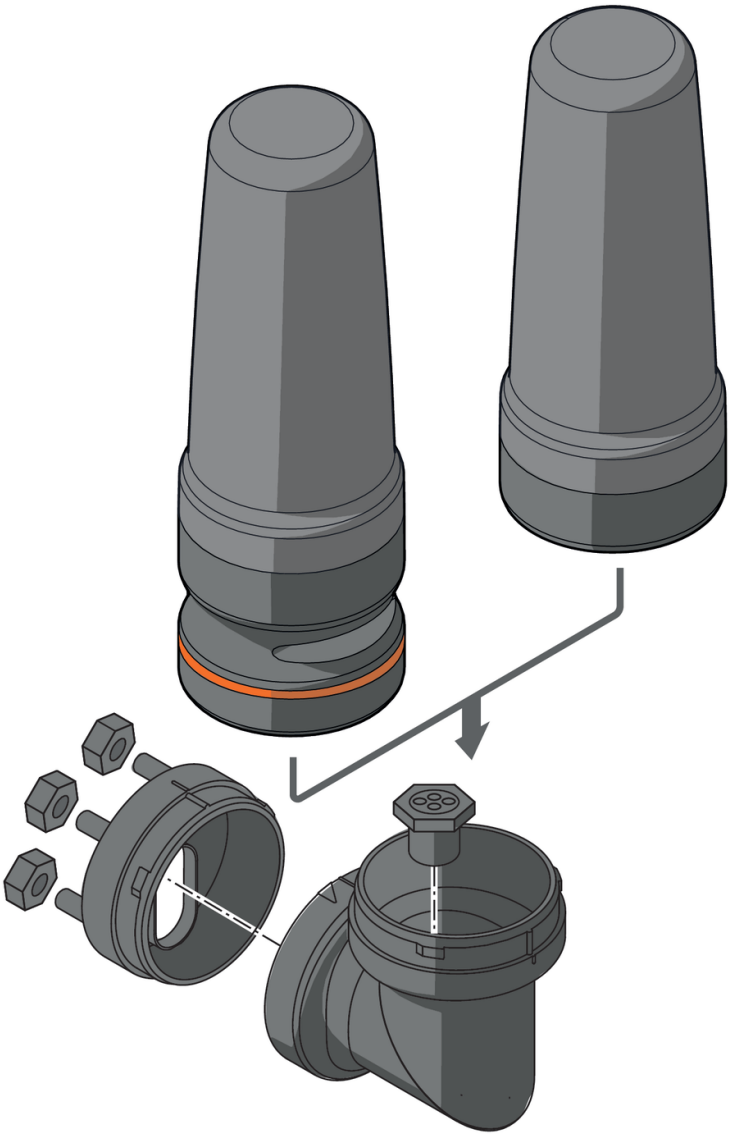

DV2330

3_Segment_Signalleuchte_mit_IO_Link_Ansteuerung

LED-Tower-3/IOL/Buzzer

Installation

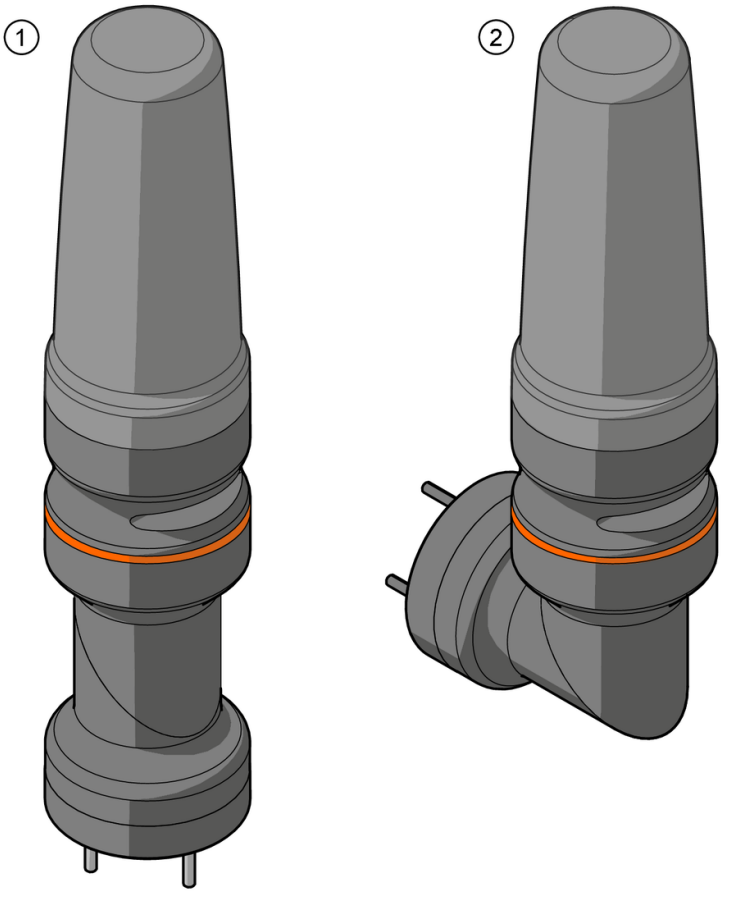

1 mounting on a horizontal surface

2 mounting on a vertical surface

DV2330

3_Segment_Signalleuchte_mit_IO_Link_Ansteuerung

LED-Tower-3/IOL/Buzzer

base mounting

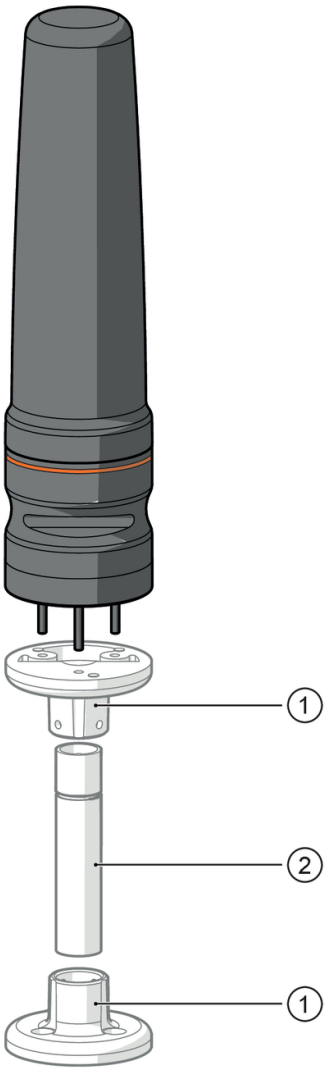

1 E89060 not supplied

2 E89065, E89066, E89067 not supplied

DV2330

3_Segment_Signalleuchte_mit_IO_Link_Ansteuerung

LED-Tower-3/IOL/Buzzer

wall mounting

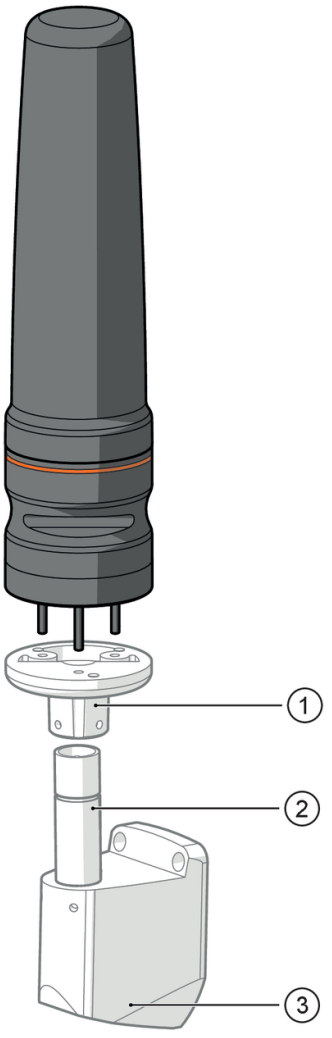

1 E89060 not supplied

2 E89065, E89066, E89067 not supplied

3 E89061 not supplied